Steam Turbine Seminar -17

Lund University

Something on hydraulics…

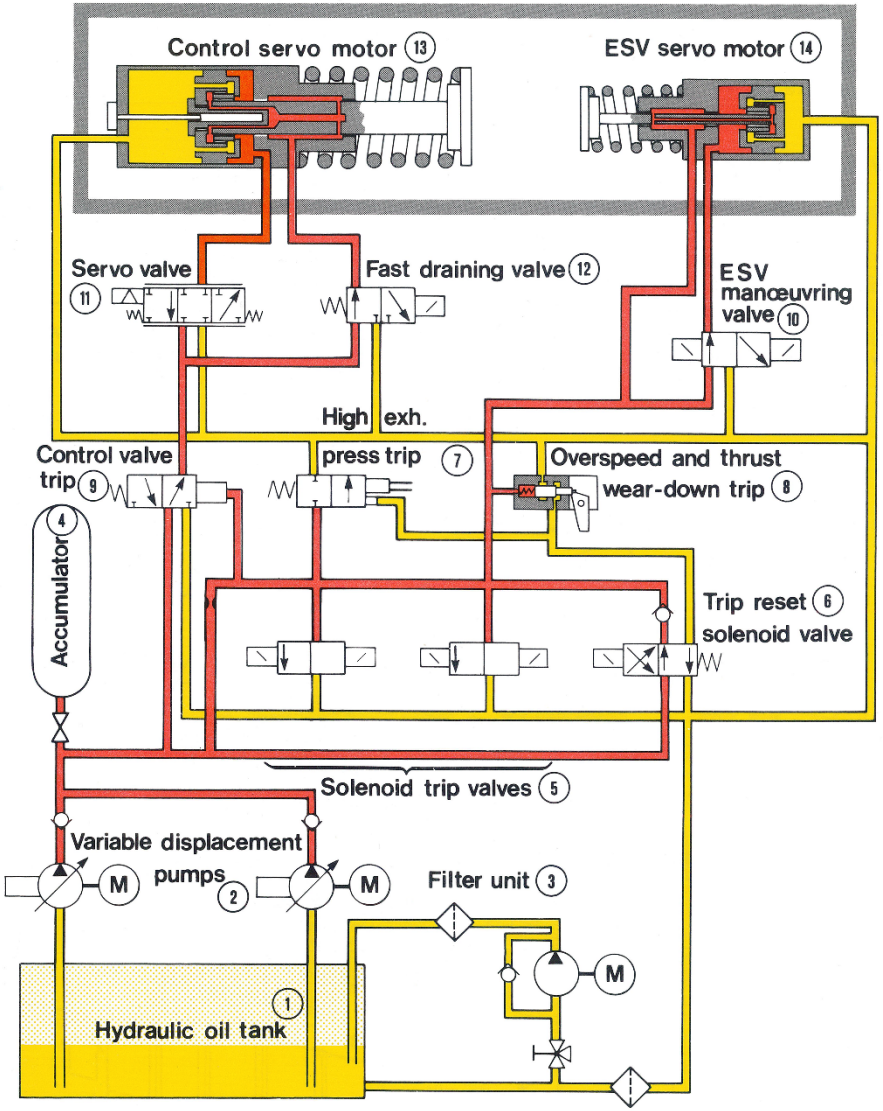

N.B. This is an old setup with 1 of 2 – the state-of-the-art is 2 out of 3 trip redundancy (both the protection system and the hydraulics)

- The safety system works like a three-way valve
- The trip system will simply de-pressurize the hydraulics system
- Most “direct” trips such as speed and condenser pressure have been replaced by 2/3 measuring devices (and trips)
- The 2/3 philosophy makes it possible to “test” the trip all the way to the hydraulics
- ESV movability test

Trip logic – non exhaustive principle

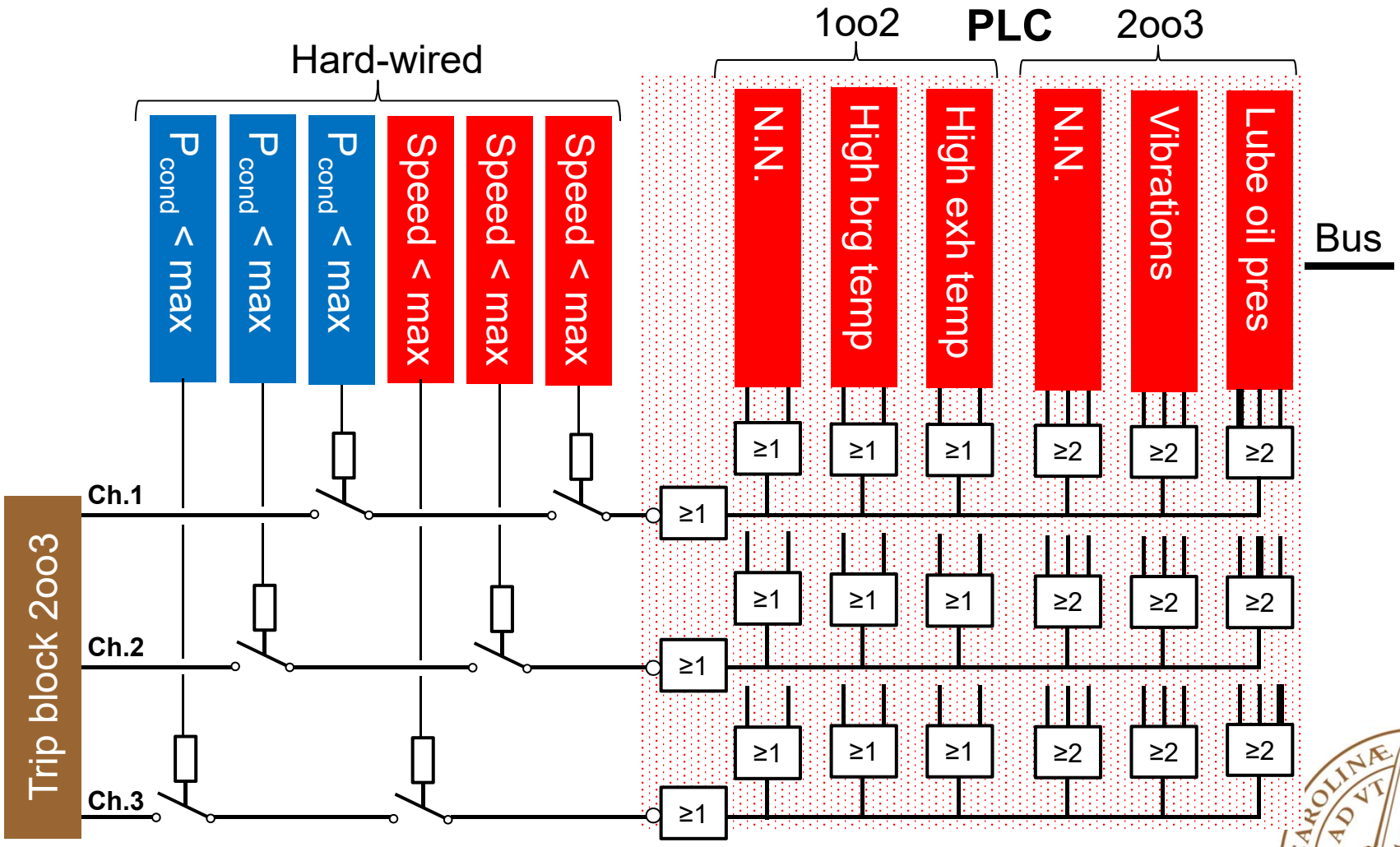

Trip block – two out of three logic

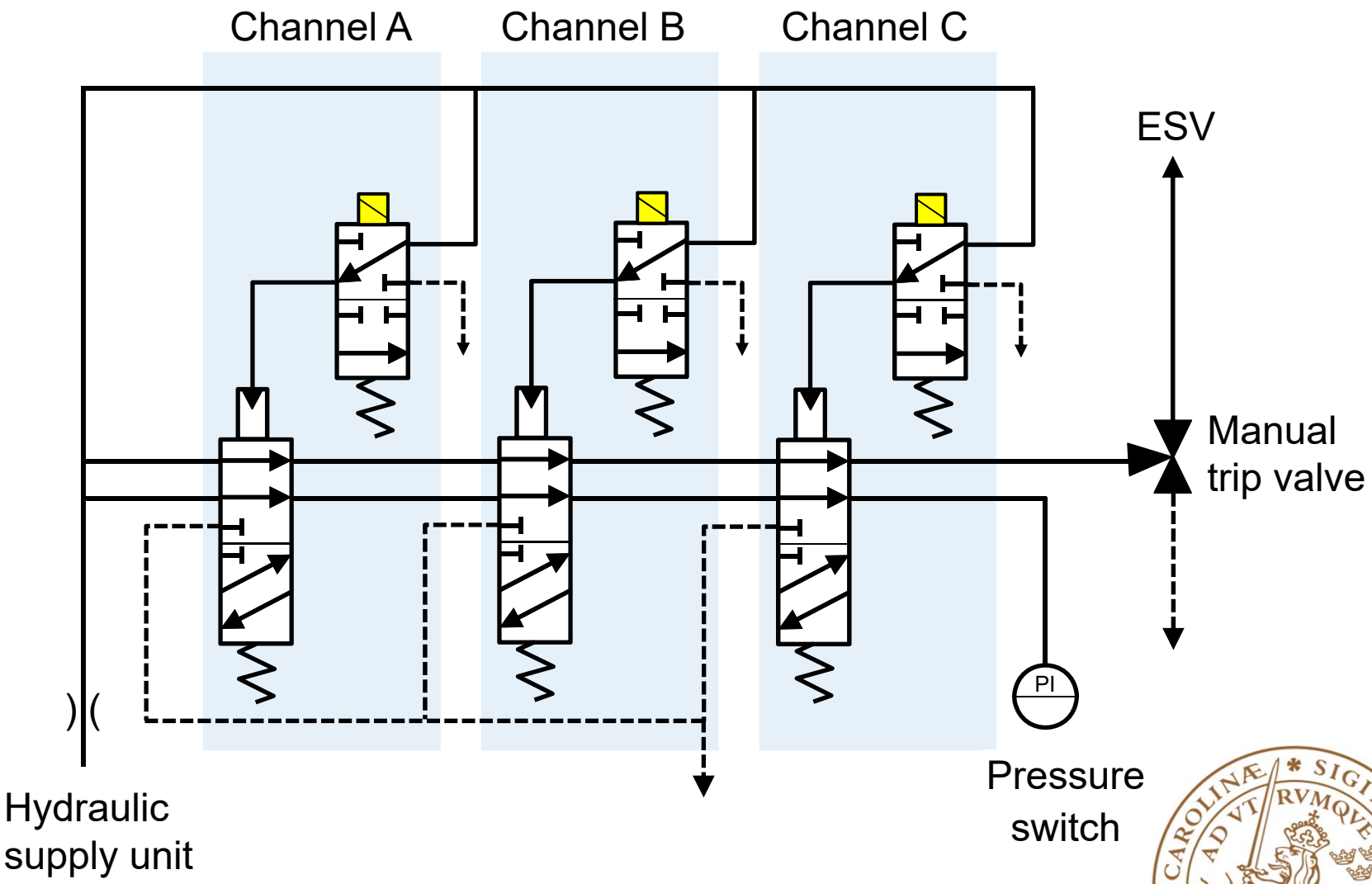

Trip block – test

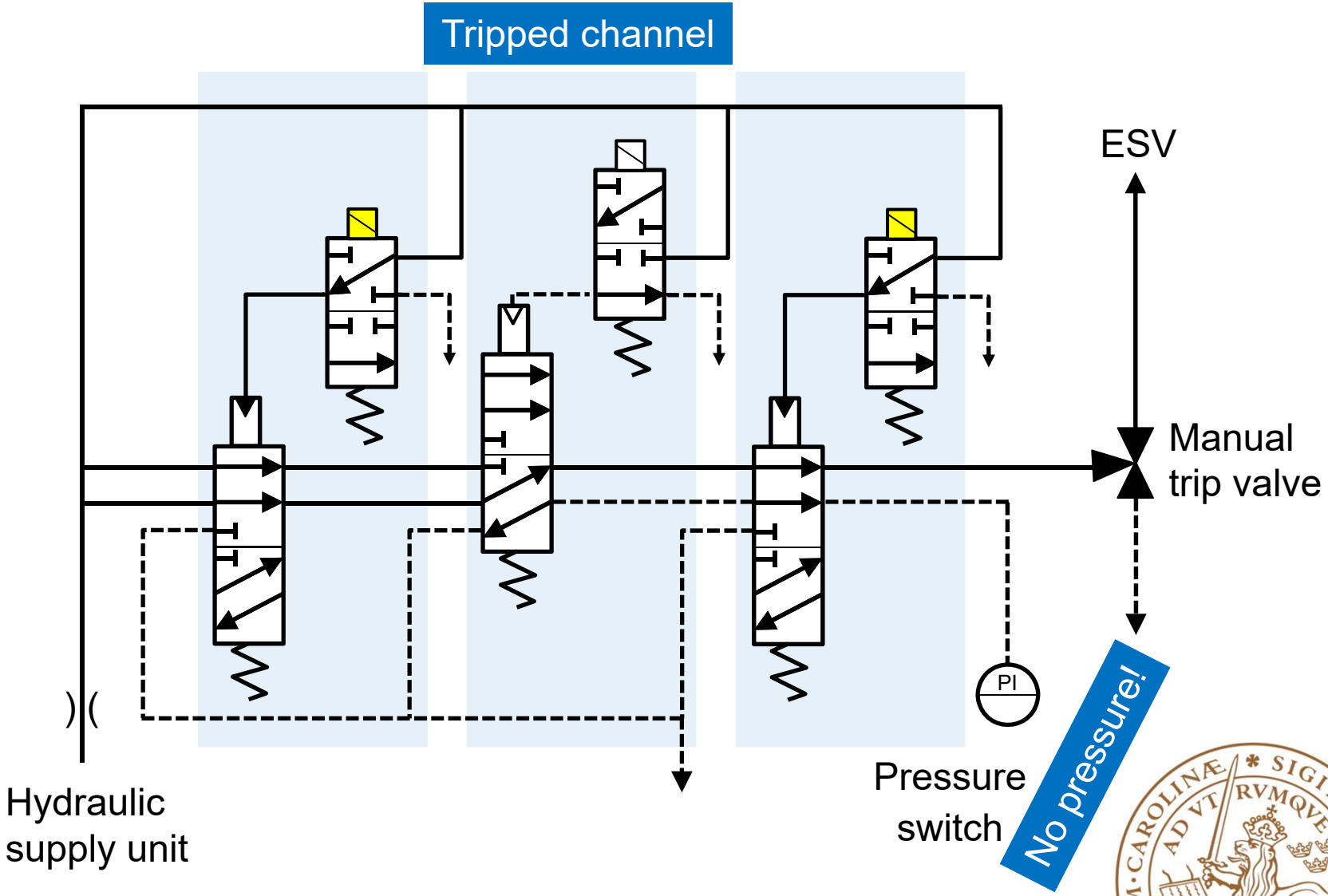

Trip block – trip

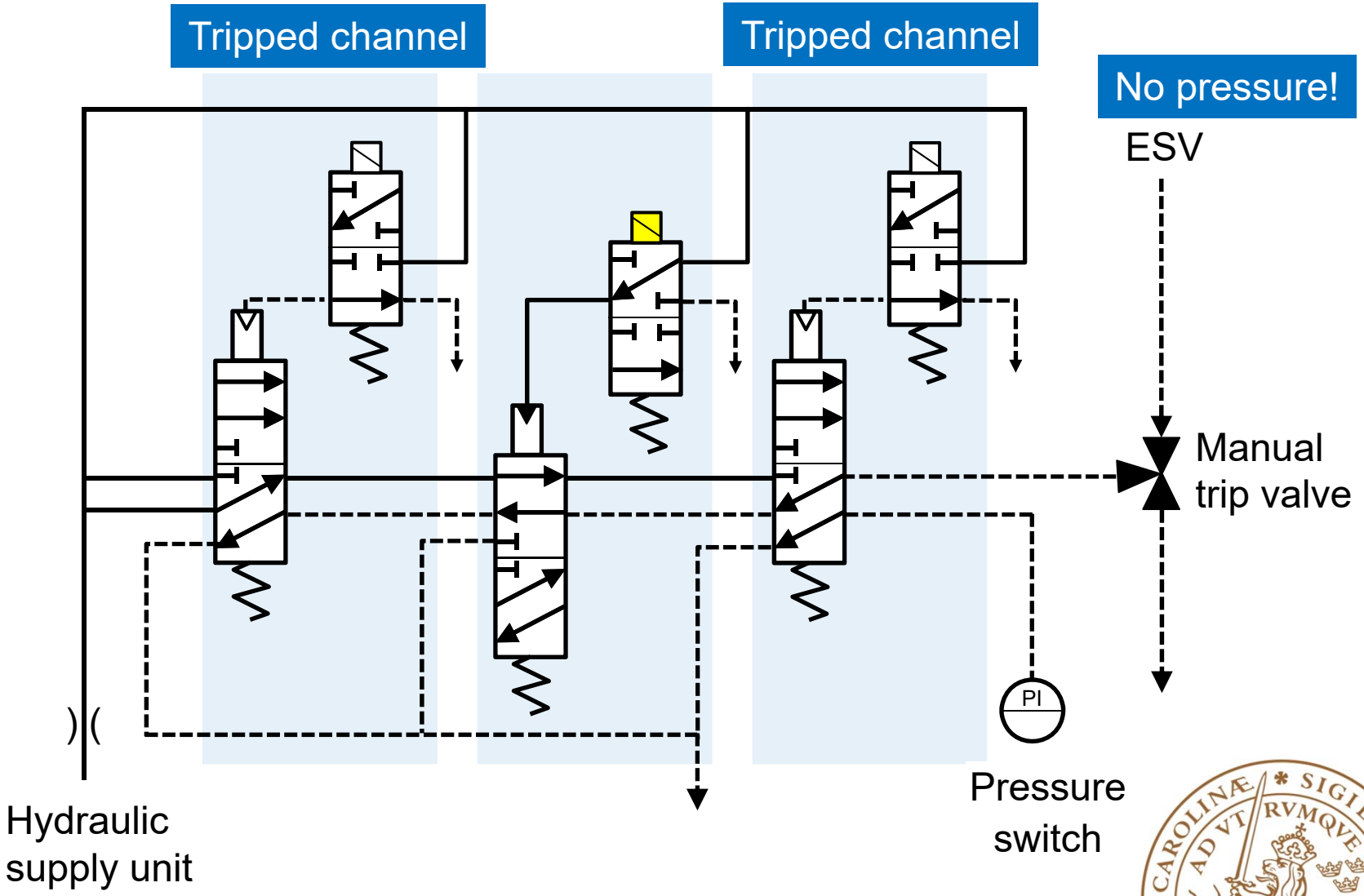

The ”Duck-Curve”…

Sweden

California

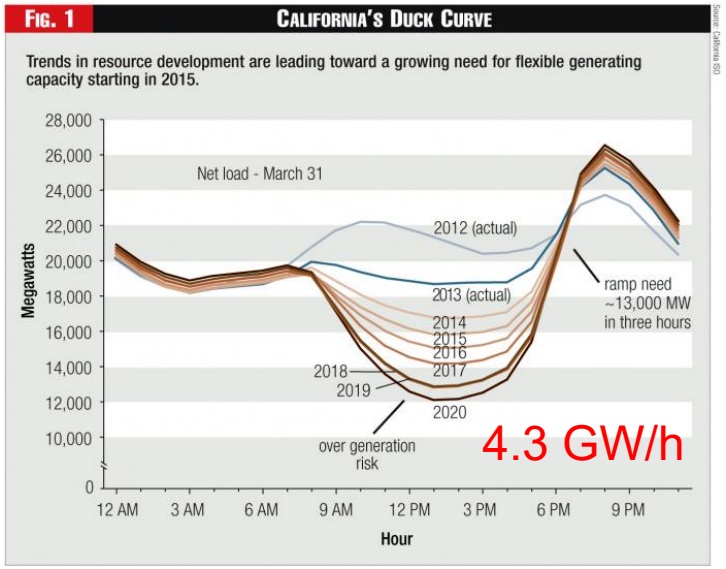

Flexibility

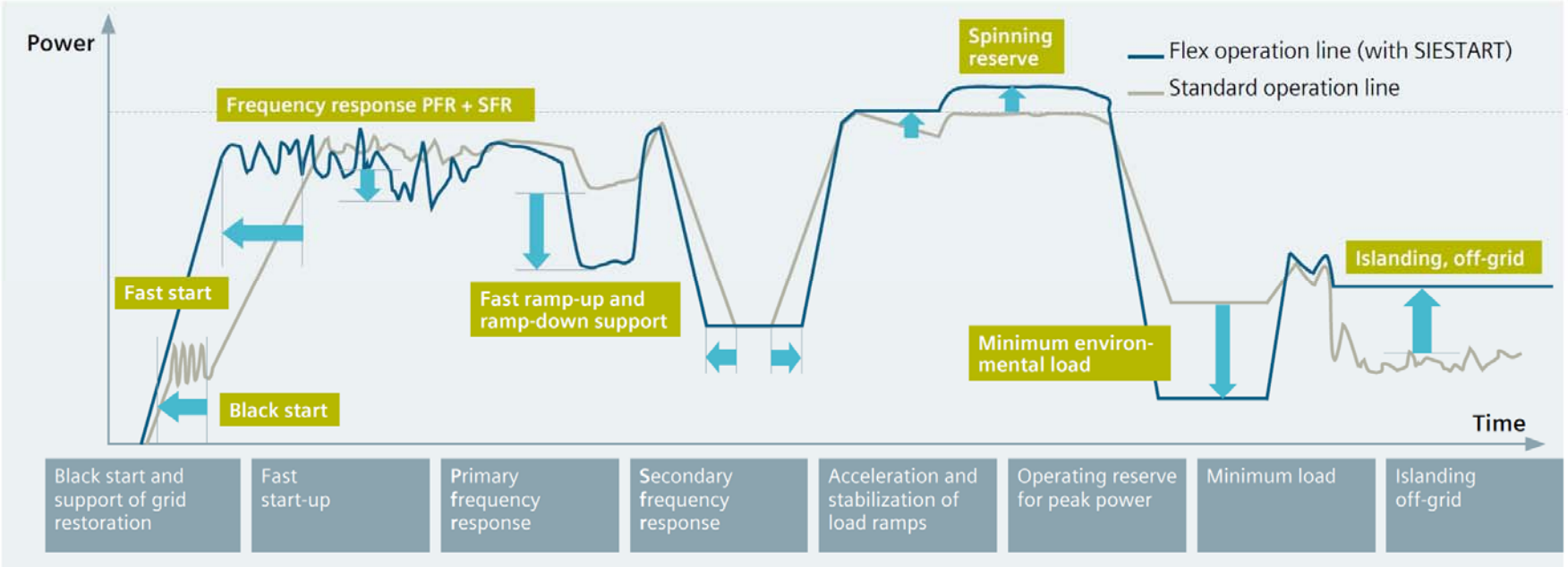

Courtesy of Siemens

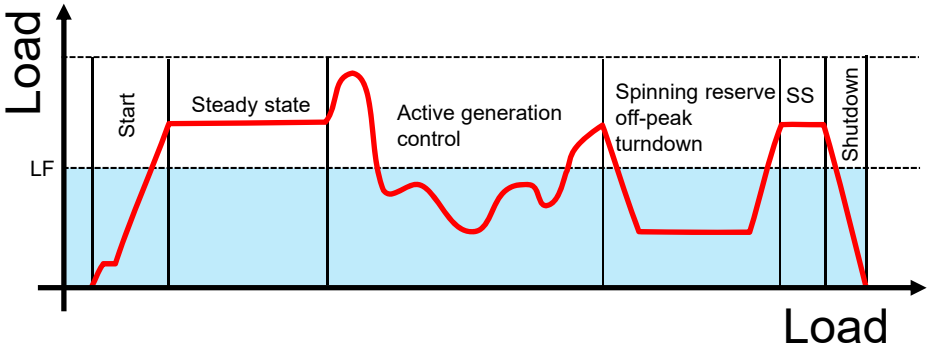

Start-up transient stress

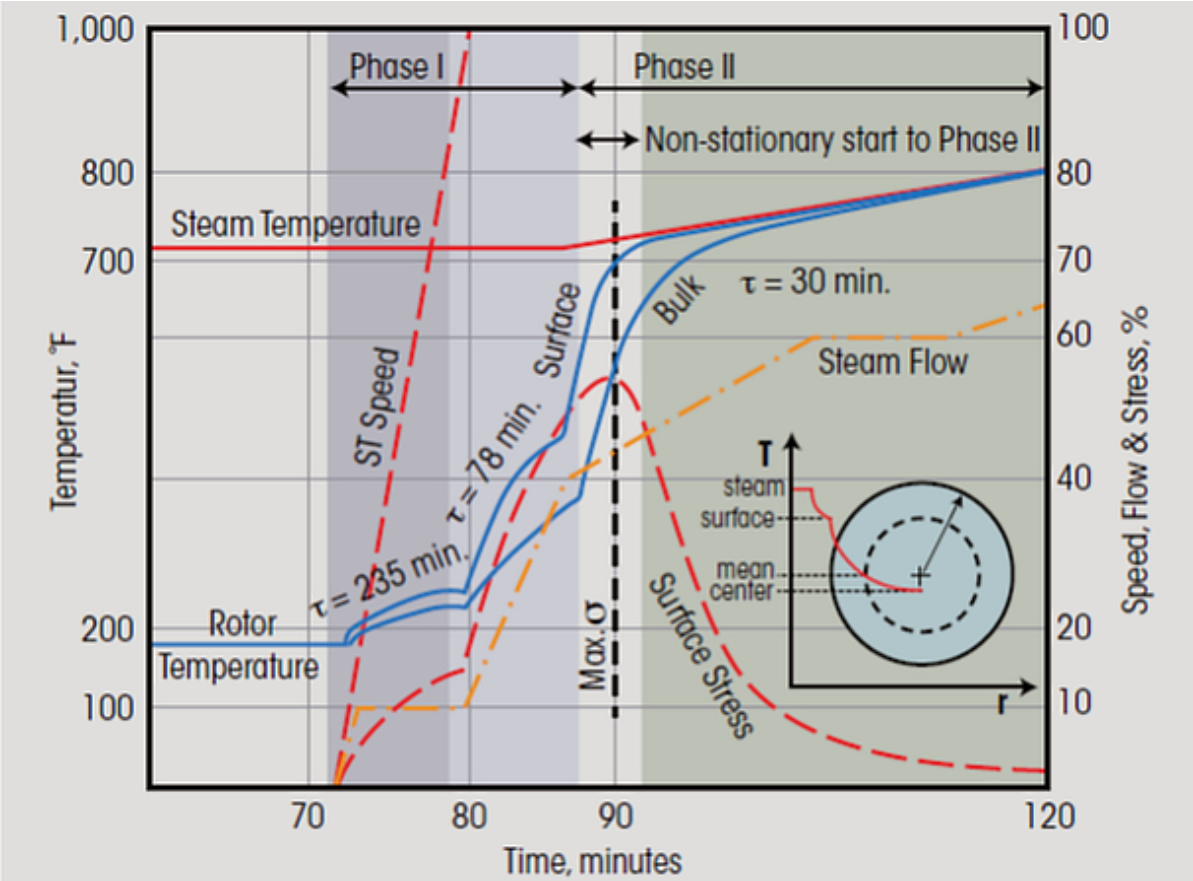

Typical ST roll via IP steam admission and the ensuing warm-up period [6]. Representative of a single-shaft GTCC cold start (total three hours). Note how the quasi-stationary Phase II is preceded by a short non-stationary period.

Courtesy of John Gülen, "*Gas Turbine Combined Cycle Fast Start: The Physics Behind the Concept*"

Turbine pressures vs. flow (load)

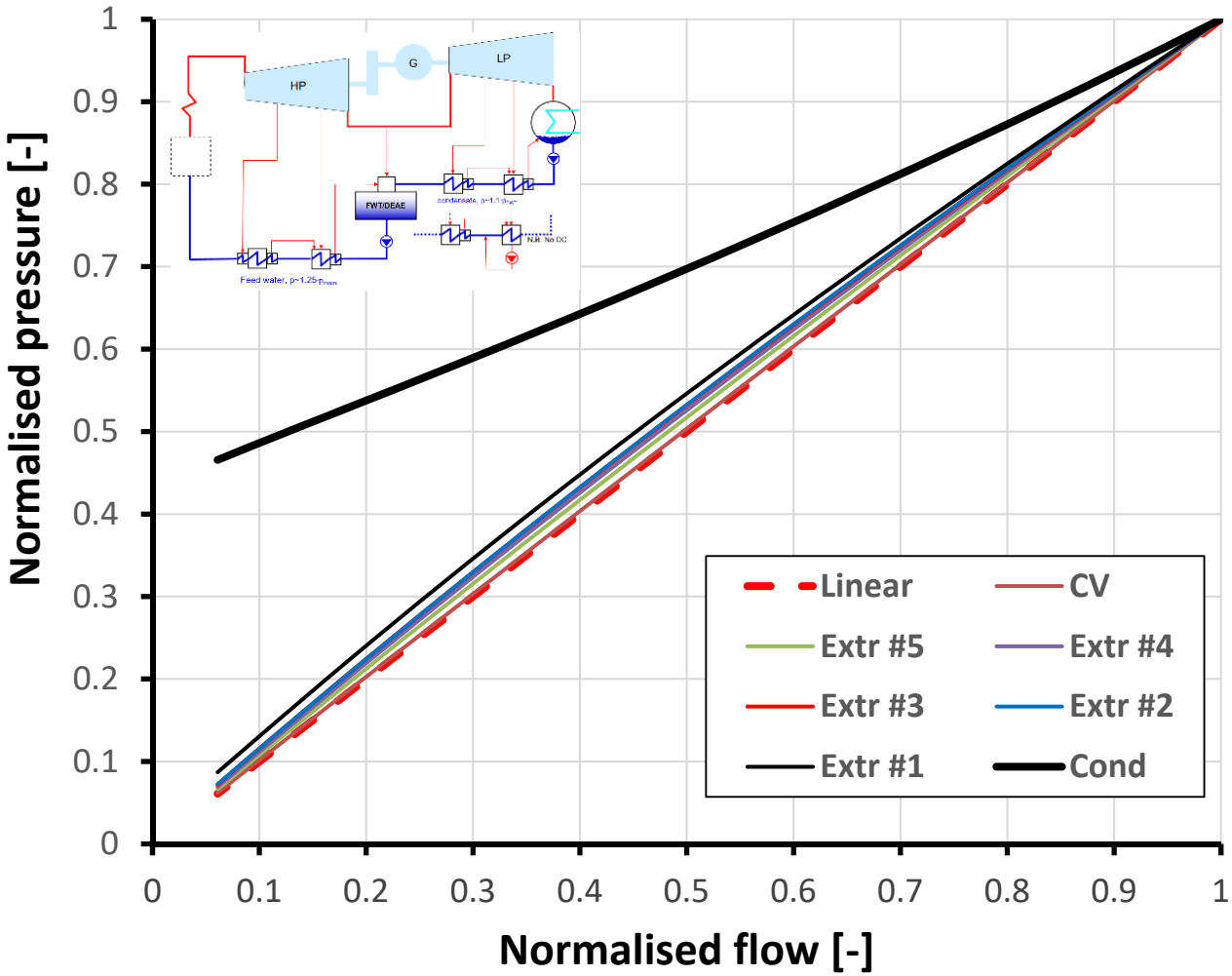

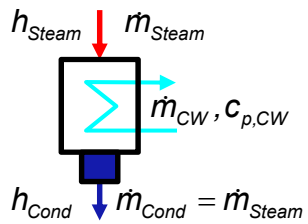

$$\dot{Q} = U \cdot A \cdot LMTD$$

$$\dot{Q} = \dot{m}_{CW} \cdot c_{p,CW} \cdot (T_{CW,in} - T_{CW,out})$$

$$\dot{Q} = \dot{m}_{Steam} \cdot (h_{Steam} - h_{Cond})$$

Condenser pressure vs. flow (load)

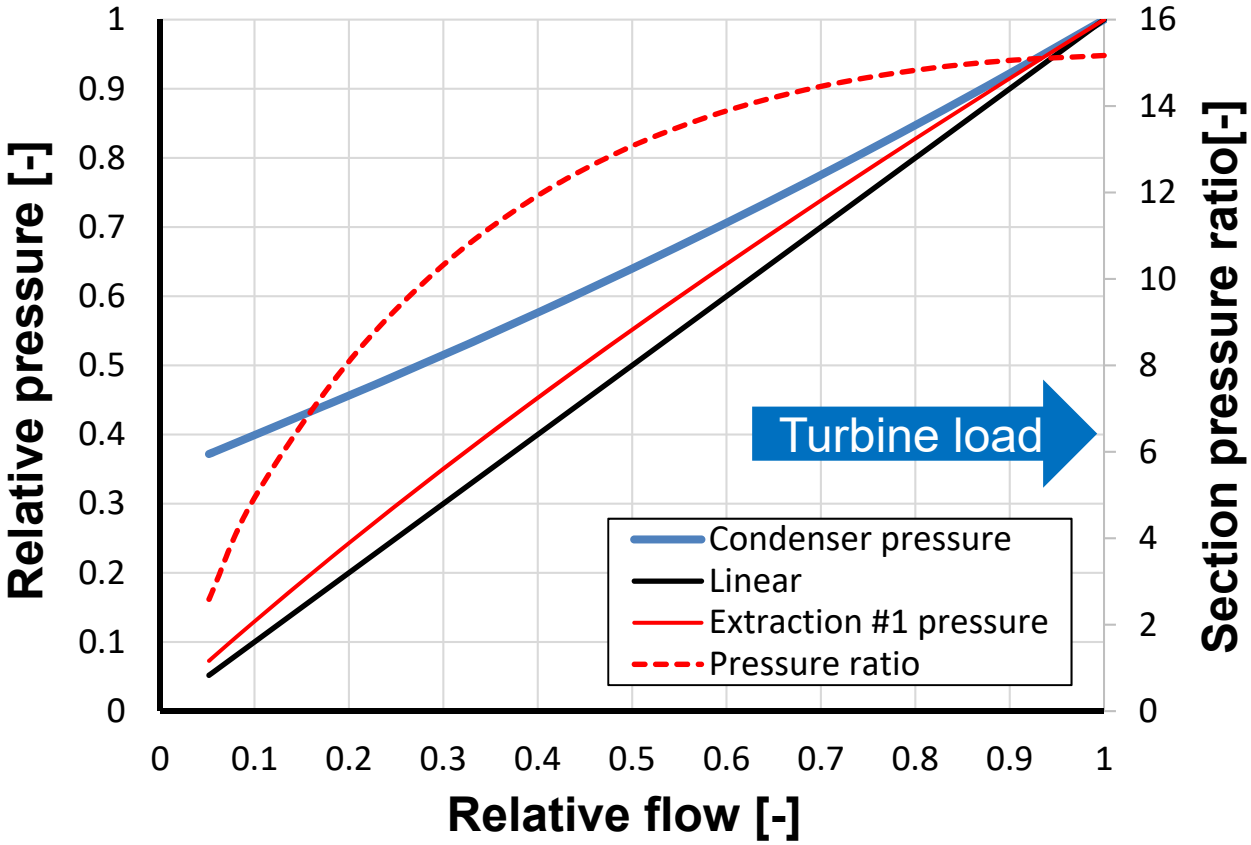

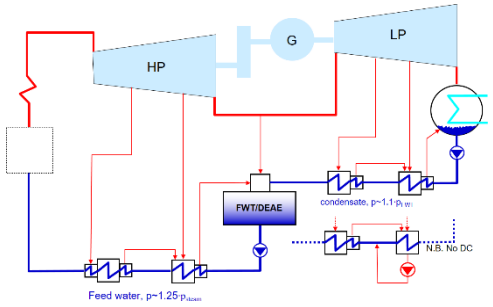

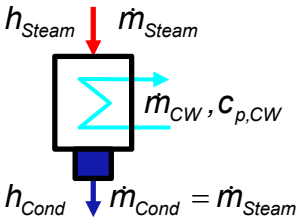

$$\dot{Q} = U \cdot A \cdot LMTD$$

$$\dot{Q} = \dot{m}_{CW} \cdot c_{p,CW} \cdot (T_{CW,in} - T_{CW,out})$$

$$\dot{Q} = \dot{m}_{Steam} \cdot (h_{Steam} - h_{Cond})$$

The proof…

Grid codes

		Germany	United Kingdom	Japan	
		VDN	National grid	Japan Electric Association	
		Transmission code	Grid code	System interconnection regulations	
		2007	2012	2013	
FRT	Renewable energy	0 V—0.15 s 85% V—15 s	0 V—0.14 s 15% V–0.14 s 80% V—1.2 s 85% V—2.5 s 90% V—3 min	Wind power 0 V — 0.15 s 90% V — 15 s (2-cycle GB is permitted)	PV 20% V—0.3 s or less Continuous operation (2-cycle GB is permitted)
	Thermal power	0 V–0.15 s (brownout period undefined)		–	
	Reactive current supply	2% I/%ΔV, Max 100%	Max 100%	–	
	Output recovery rate	20% P/min	0.5 s after voltage recovery 90% P	1 s after voltage recovery 80% P	0.1 s after voltage recovery 80%P (> 20%V) 1 s after voltage recovery 80% P (<20% V)
Frequency fluctuation	Renewable energy	>+0.2 Hz droop gain 5% (MW decrease)	<−0.5 Hz 10% UP in 10 s and keep 30 min (some excluded)	Step change in 3 cycle ± 0.8 Hz (50 Hz), ± 1.0 Hz (60 Hz) Ramp change ± 2 Hz/s 47.5–51.5 Hz, 57–61.8 Hz − > continuous operation	
	Thermal power	Droop control Control width ± 2%		–	

Grid stability

The inertia constant:

$$\tau_I = \frac{E_r}{P_{nom}} = \frac{1/2 \cdot I_r \cdot \omega^2}{P_{nom}} = 1/2 \cdot (2 \cdot \pi \cdot f)^2 \cdot \frac{I_r}{P_{nom}} \quad \left[\frac{J}{J/s} = s\right]$$

The inertia constant is typically within the range of 5 and 10 seconds:

Nominal power = 500 MW

5 s.	2500 MJ
10 s.	5000 MJ

Energy required during a start @ 5000 MJ, as 48 MJ/kg natural gas:

$$\frac{5000}{48} \cdot \frac{1}{0.4} \approx 260\ kg$$

This is equivalent of some 280000 cups of tea!

Grid stability

10 units á 500 MW running at 90 % load – 4500 MW

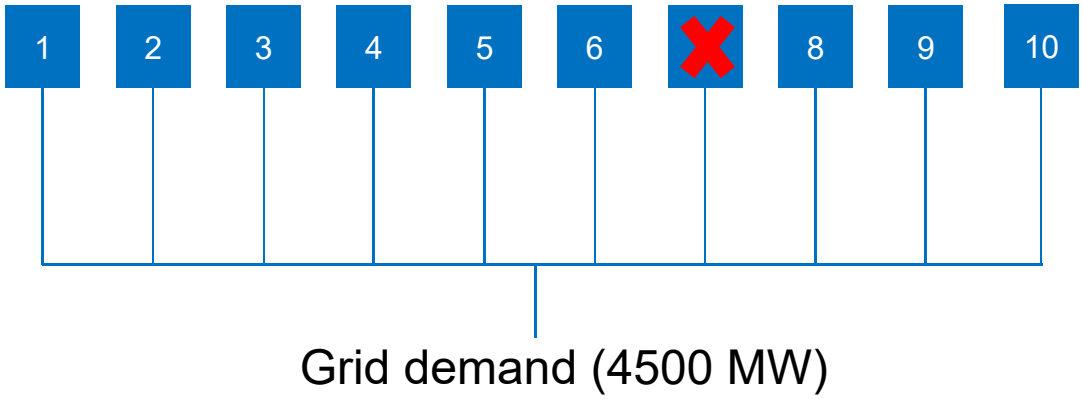

Speed/frequency vs. time @tau=10 s.

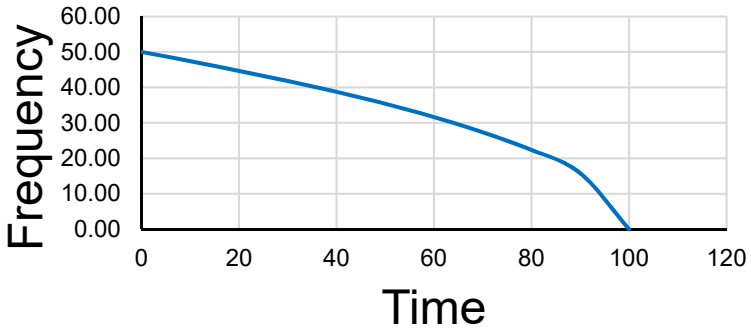

$$f(t) = \sqrt{f_{nom}^2 + \frac{\Delta P}{P_{nom}} \cdot \frac{f_{nom}^2}{\tau_I} \cdot t}$$

$$\left(\frac{df}{dt}\right)_{@t=0} = \frac{\Delta P}{2 \cdot \tau_I \cdot P_{nom}} \cdot f_{nom}$$

Grid stability

10 units á 500 MW running at 90 % load – 4500 MW

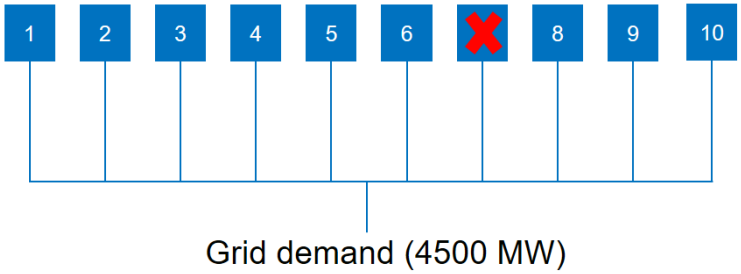

$$\left(\frac{df}{dt}\right)_{@t=0} = \frac{\Delta P}{2 \cdot \tau_I \cdot P_{nom}} \cdot f_{nom}$$

$$\frac{df}{dt} = \frac{\Delta P - \overbrace{\frac{a}{100} \cdot P_{init} \cdot (f_{nom} - f)}^{Self\ regulating} + P_{pc}}{P_{nom}} \cdot f_{nom}^2 \cdot \frac{1}{2 \cdot f \cdot \tau_I}$$

Increased flexibility – starting

- Stress controller
  - State-of-the
- Blankets
  - Since the 80s – mature if OEM involved
- Hot air
  - High initial cost
  - Very effective
- High-speed barring
  - Risky…

Heating blankets

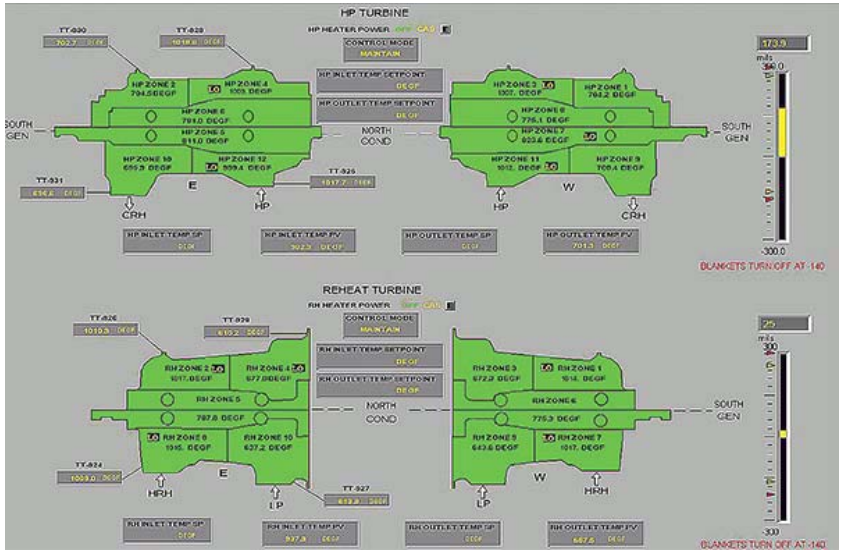

Hot-air ST warming

- Used by Karlshamnsverket (KKAB) since 1980s
  - ✓ Large 340MW HP-IP-LP Alstom (BBC) utility turbines
- Flanges for blower/heater
- Open vacuum breaker
  - ✓ About 15 minutes for hogging/vacuum pull
  - ✓ No corrosion risk since RH<<60 percent

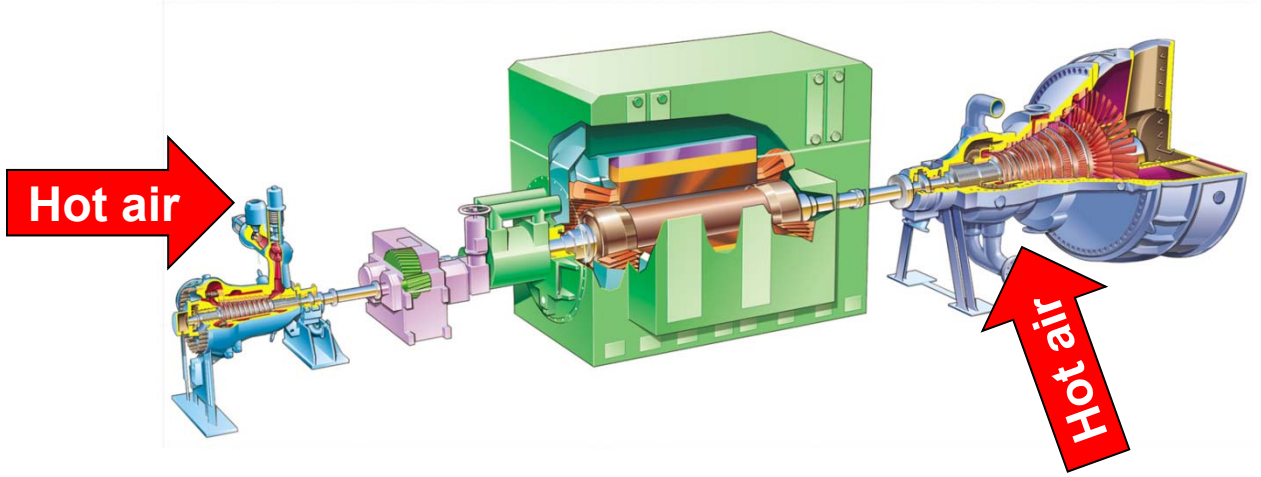

Background

Traupel – "Thermische Turbomachinen"

420 8 Berechnungsunterlagen

in empfindlicher Weise von den Labyrinthspaltweiten ab, wird also von Fertigur ranzen, Wärmedehnungen und dgl. beeinflußt. Daher ist es unmöglich, den S zustand rechnerisch vorauszubestimmen. Will man ohne oder mit weniger an der Nabe arbeiten (negative Reaktion sollte vermieden werden) so i mit Zusatzlabyrinth vorzuziehen. Der Leitradspaltverlust ist da alls etwa durch Gl. 8.4(27) gegeben, günstigstenfalls (Fall h) ist 2(1 - setzen. Man wird also mit

$$\zeta'_{sp} \approx 1{,}5(1 - r_N)\,\mu' \left[1 - \left(\nu - \right.\right. \qquad 8.4(29)$$

der Wirklichkeit etwa nahe kommen. Etwa vor te es richtiger sein, die Löcher wegzulassen. Das führt zu jener Zw s Schwachreaktionsturbine bezeichnet worden ist.

Der *Radreibungsverlust* ζ_N ist da eine in einem Gehäuse rotierende Scheibe je Scheibenseite ein Reib

$$N D_N^3 C_M \qquad 8.4(30)$$

erfährt, wo u_N und D ndigkeit und Durchmesser der Scheibe (Nabe) sind. Der Momentb . 8.4.6) ist für die glatte Scheibe aus Messungen bekannt, vgl. [7]. F nen ergeben sich größere C_M-Werte. Meist ist dieser Verlust jedoch große Genauigkeit nicht erforderlich ist. Die Re-Zahl zur Bestimm $_N D_N/\nu$. Für eine Stufe mit der Druckzahl ψ und der Durchsatzzahl g von 1 verschiedenen Beaufschlagungsverhältnis ε läßt sich aus M en. Für beide Scheibenseiten zusammen erhält man

$$\zeta_R = \frac{1{,}27 C_M}{\varepsilon} \frac{(D_N/D_2)^4\,(D_N/l_2)}{\varphi\psi}, \qquad 8.4(31)$$

D_2 und l_2 der mittlere Durchmesser und die Schaufellänge am Austritt sind, wenn φ d ψ hierauf bezogen werden. Eine Einführung eines Reibungsverlustes von Laufraddeckbändern ist nicht notwendig, da jene Fläche durch den mit Drall strömenden Laufradleckstrom bestrichen wird.

Der *Ventilationsverlust* ζ_V möge hier so definiert werden, daß er sogleich den ganzen Verlust durch Teilbeaufschlagung umfaßt. Er enthält also außer der Energiedissipation durch den Ventilationsvorgang selbst auch diejenige, die an den Sektorenden insbesondere durch instationäre Strömungsvorgänge entsteht. Darüber besteht eine umfangreiche Literatur, vgl. [63 bis 68]. Die reine Ventilationsleitung P_V läßt sich mit hinreichender Näherung darstellen durch

$$P_V = \pi C(1 - \varepsilon)\,\varrho D_2 l_2 u_2^3. \qquad 8.4(32)$$

Der Beiwert C hängt ab von der baulichen Anordnung und davon, ob der Schaufelkranz vorwärts oder rückwärts dreht (Rückwärtsturbine bei Vorwärtsfahrt eines Schiffes). Es kann dafür etwa folgendes gesetzt werden:

Kranz frei, vorwärts	$C \approx [0{,}045 + 0{,}58 l/D] \sin\beta_2$	8.4(33)
Kranz frei, rückwärts	$C \approx [0{,}099 - 14{,}6(l/D)^2] \sin\beta_2$	
Kranz eingehüllt, vorwärts	$C \approx 0{,}0095 + 0{,}55(0{,}125 - l/D)^2$	
Kranz, eingehüllt rückwärts	$C \approx 0{,}01 + 1{,}5(0{,}125 - l/D)^2$	

Unter dem eingehüllten Kranz wird die Anordnung nach Abb. 8.4.18 verstanden. Diese Angaben stützen sich auf die Untersuchungen bei [63], doch ist dem in [68] angegebenen Befund noch Rechnung getragen, daß der Verlust bei freiem Kranz proportional $\sin\beta_2$ ist. Bei [63] war $\beta_2 = 26{,}5°$, so daß die oben angegebenen Zahlenfaktoren, multipliziert mit $2\sin(26{,}5°)$ wieder auf die ursprünglichen Werte in [63] führen. Es ist weiter zu beachten, daß die Versuche mit stark asymmetrischen Schaufeln mit gerundeter Eintrittskante durchgeführt wurden. Bei annähernd, symmetrischen Schaufelprofilen vom „klassi-

VGB Guideline – "Thermal Behavior of Steam Turbines"

— HP and IP valv

— HP and IP inlet lines.

It is thus dependent on the time that has pas ut down assuming natural cooling (Figures

This necessitates the steam tempers possible for a cold start, taking into accour drop caused by throttling processes in the

Owing to the differen ie individual components (Section 6.3.1) ar alization in the HP and the IP turbine sectio erature should be chosen within a certain ra p time as short as possible and to protect th able standard values that describe the typ- i ken from the characteristic temperature zones e casing temperature) in Figure 65.

ones, take into account the temperature drop caused by urbine's control valves and the temperature drop in the stage m expansion. They also take into account the shortest possible p time under load which is achieved by combining an initial tempera- e step with a specific subsequent temperature transient, while at the same time an undesired cooling of the HP outlet zone is avoided.

If the plant is started cold it is essential that, apart from the aspects mentioned so far, special attention is paid to the risk of brittle fracture.

An economic and safe method of preheating components which are subjected to centrifugal forces and compression stress to a temperature which ensures adequate resistance to fracture, is to warm all turbine sections for two to three hours using auxiliary steam (p = approx. 10 to 15 bar; ϑ = approx. 250 to 350 °C) or gland steam at an elevated condenser pressure. This method permits particularly the IP exhaust area and the low-pressure rotor to be sufficiently warmed up without major start-up losses resulting from a too long bypass operation. Moreover, load can be applied relatively quickly even during cold starting.

No-load operation and load application:

During no-load operation, particularly the exhaust steam temperature of the HP turbine section rises, especially when the pressure in the cold reheat line is relatively high.

94

High-speed barring

- Both ventilation and disk friction feed energy into the trapped steam.
  - Scales with speed cubed and density
  - Normal barring speed is approx. 200 rpm
- Potential risk of uneven temperature
  - More work with longer blades and stage diameter
  - LSB spray cooling
  - Pipe and valve from HP-extraction to condenser

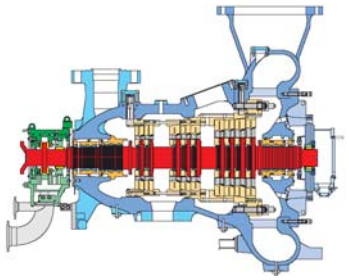

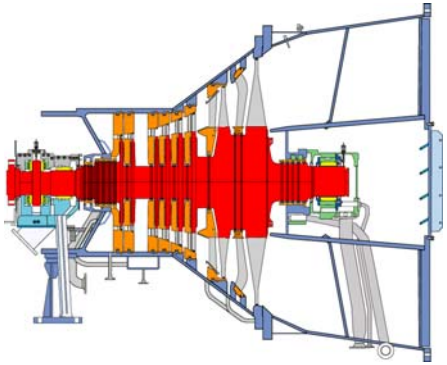

Shaft glands

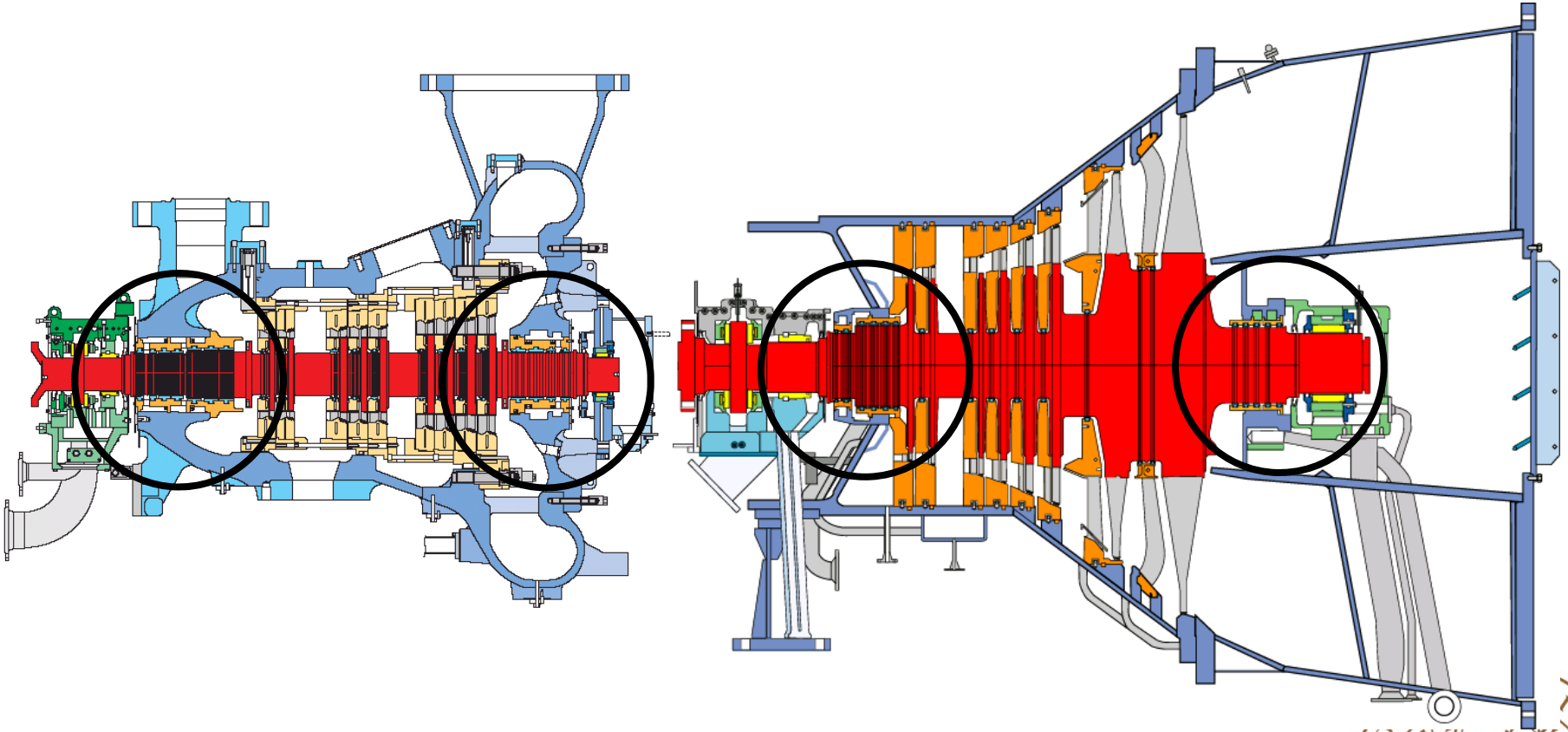

Courtesy to Siemens

Gland system – Increased pressure

No or low load

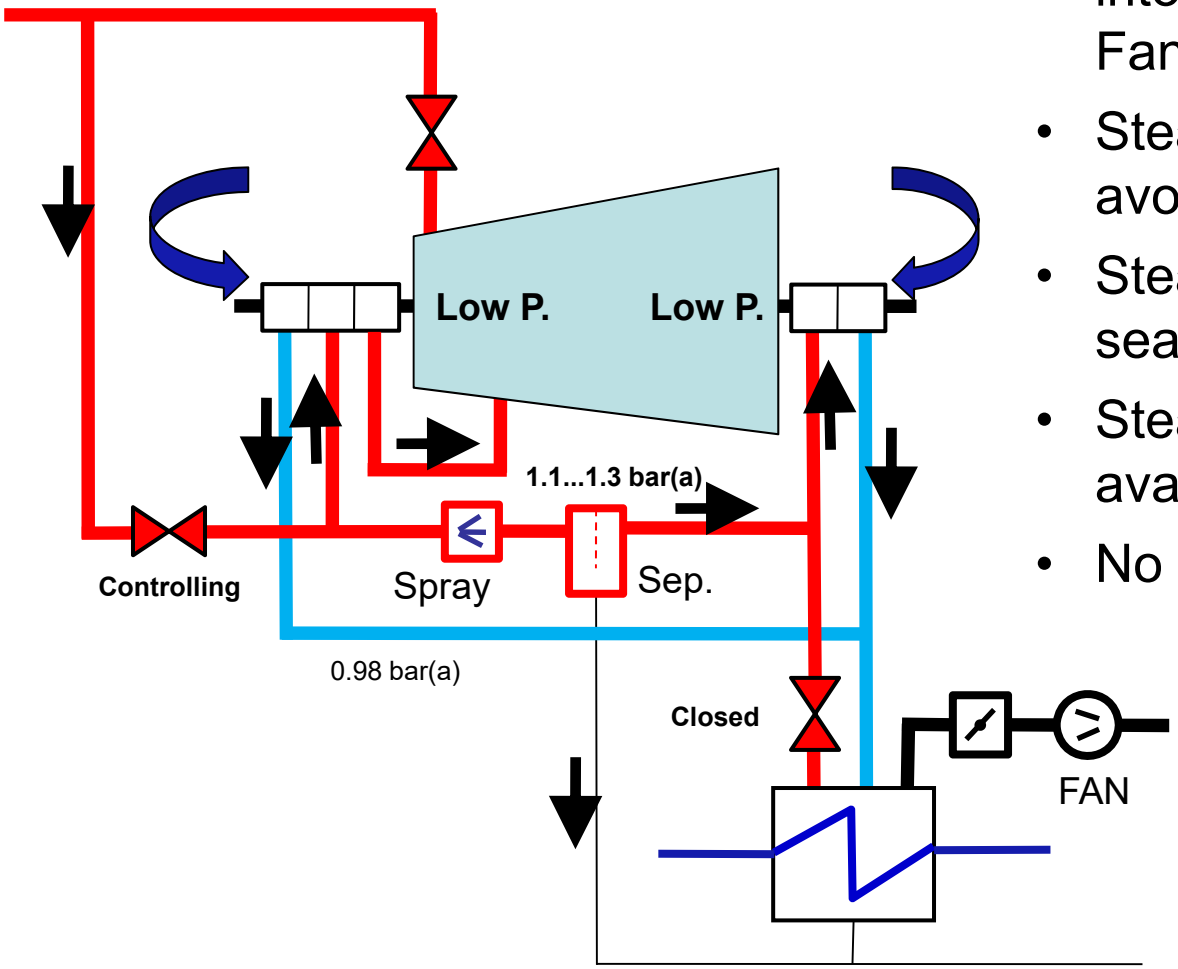

- The mass flow of seal steam into the turbine(s) follow a Fanno line
- Steaming seals should be avoided
- Steam into the HPT through seal off-load pipe(s)
- Steam supply must be available
- No hard-ware modifications

Increased flexibility – in operation

- Capacity bypass
  - Loss one in use
- Extra arc
  - Small loss when not used
- Top-heater shut-down
  - Thrust force
- Condensate pump shut-down – sliding pressure mode
  - Caveat! Drum- and hot well levels

Enhanced flexibility

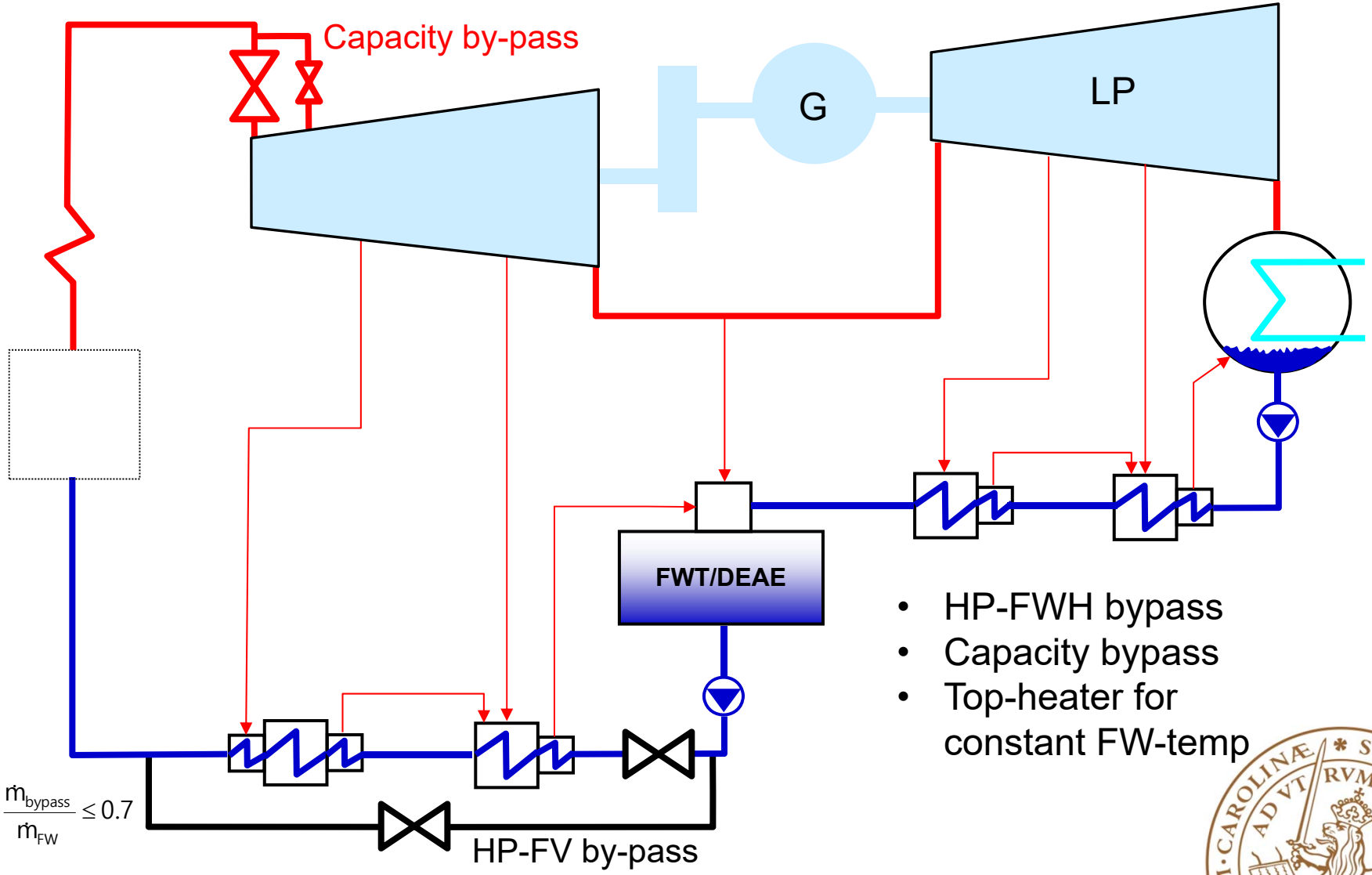

- HP-FWH bypass
- Capacity bypass
- Top-heater for constant FW-temp

Rotor stress – temperature gradients

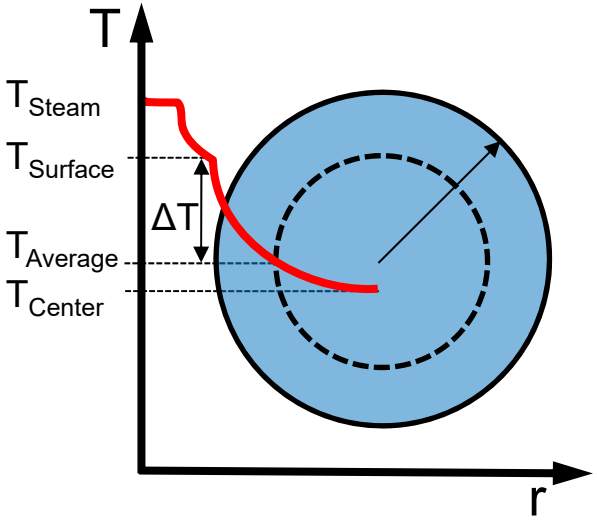

Temperature induced stresses (radial and hoop):

$$\sigma_r(r) = \frac{\alpha E}{(1-\mu) r^2} \left\{ \frac{r^2 - r_i^2}{r_y^2 - r_i^2} \int_{r_i}^{r_y} T\, r\, dr - \int_{r_i}^{r} T\, r\, dr \right\}$$

$$\sigma_\theta(r) = \frac{\alpha E}{(1-\mu) r^2} \left\{ \frac{r^2 - r_i^2}{r_y^2 - r_i^2} \int_{r_i}^{r_y} T\, r\, dr - \int_{r_i}^{r} T\, r\, dr - T r^2 \right\}$$

Simplified equations for a case **without** a bore:

$$\sigma_r(r) = \alpha E \left\{ \frac{1}{r_{rim}^2} \int_0^{r_{rim}} T(r) dr - \frac{1}{r^2} \int_0^{r} T(r) dr \right\} \approx \frac{\alpha E \Delta T}{3} \left(1 - \frac{r}{r_{rim}} \right)$$

$$\sigma_\theta(r) = \alpha E \left\{ \frac{1}{r_{rim}^2} \int_0^{r_{rim}} T(r) dr - \frac{1}{r^2} \int_0^{r} T(r) dr - T \right\} \approx \frac{\alpha E \Delta T}{3} \left(1 - 2 \frac{r}{r_{rim}} \right)$$

Example

$\alpha = 1.8 \cdot 10^5$ °C^{-1}
$E = 6.9 \cdot 10^4$ MPa
$\Delta T = 55$ °C
$\boldsymbol{\sigma_{@r=0}}$ **= 46 MPa**

Rotor stress – temperature gradients

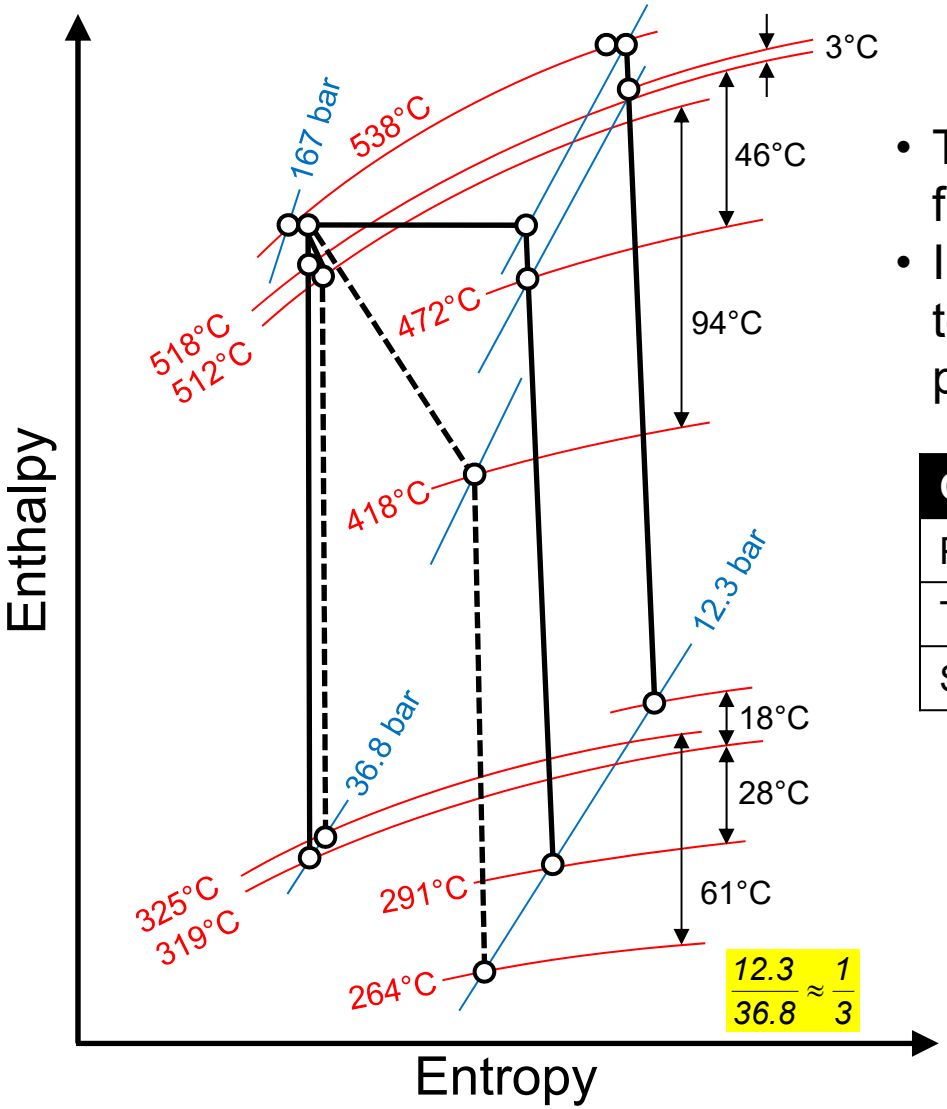

- The HPT-example shows a load change from full to 1/3 load
- IPT swallowing capacity and re-heater temperature controls the HPT back-pressure

Control mode	ΔT first stage	ΔT exhaust
Partial arc	94°C	61°C
Throttle	46°C	28°C
Sliding	3°C	18°C

Fatigue – low or high?

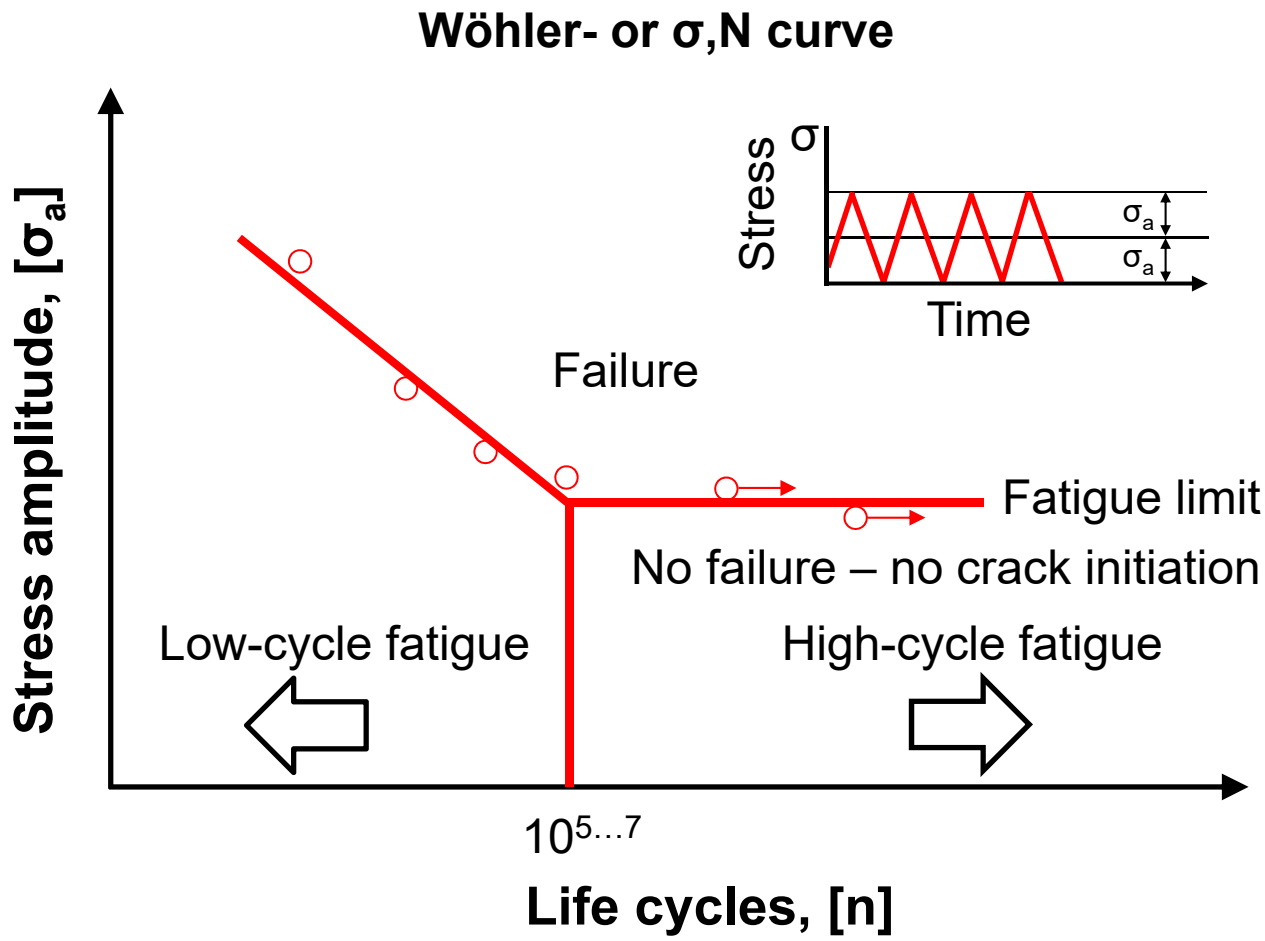

Based on Tanuma & Tadashi, "*Advances in Steam Turbines for Modern Power Plants*"

Casing wall temperature probe

Avancerad turbinregulator

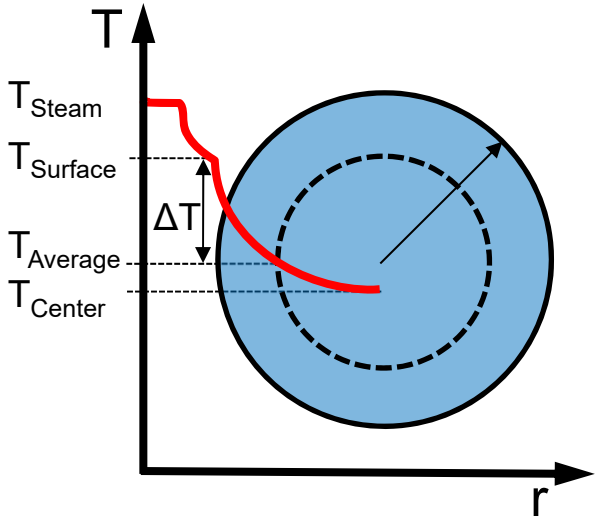

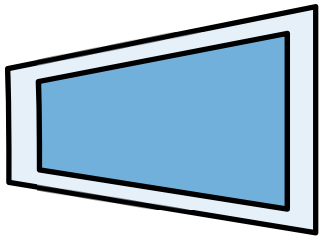

Aged deterioration – failures

Type of deterioration	Mode of deterioration		Damage or incidence	Typical damaged portion
Material	Creep		Crack	HP/IP shroud, blade groove, HP/IP casing, main pipes, main valves
	Embrittlement		Brittle fracture	HP/IP rotor
	Fatigue	Thermal fatigue	Crack	HP/IP heat groove, bottom of blade root groove
		Low-cycle fatigue	Crack	LP last blades groove of LP rotor, HP/IP casings
		Fretting	Crack	HP/IP blade groove of rotor
	Environment assisted crack	Dynamic SCC*	Crack	Blade groove of LP rotor
		Static SCC*	Crack	Blade groove of LP rotor
		Corrosion fatigue	Crack	Blade root and groove, shroud and profile
Performance	Softening		Loosening	Casing bolts (high temperature)
	Creep		Deformation	HP/IP diaphragm nozzle plate (impulse), HP/IP rotor and inner casings (leak)
	Wear/rubbing		Efficiency decrease	Seals, bearings, valve shafts
	Erosion/FAC		Efficiency decrease	Control stage nozzle and LP last stages
	Scale deposition		Efficiency decrease, stick, rubbing	HP/IP nozzles and blades, main valves

*Stress corrosion cracking

Based on Tanuma & Tadashi, "*Advances in Steam Turbines for Modern Power Plants*"

Environment assisted crack

- Static stress
- Repetitive stress
- Vibration stress

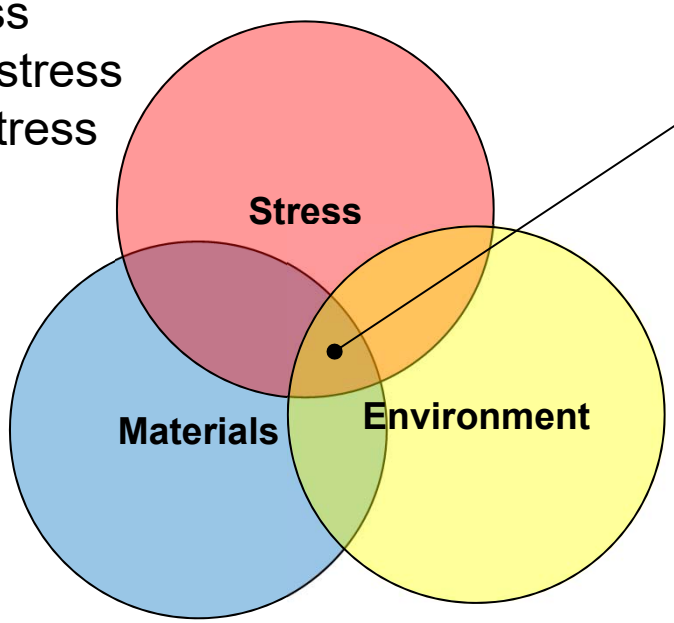

- SCC
- Dynamic SCC
- Corrosion fatigue

- Strength – high is more suspicious for SCC
- Impurities etc.

- Temperature
- Wetness*
- Dissolved oxygen
- Impurities in steam
- Start-up and shutdown

} Corrosive environment

*Wilson zone

Based on Tanuma & Tadashi, "Advances in Steam Turbines for Modern Power Plants"

Turbine damage – erosion

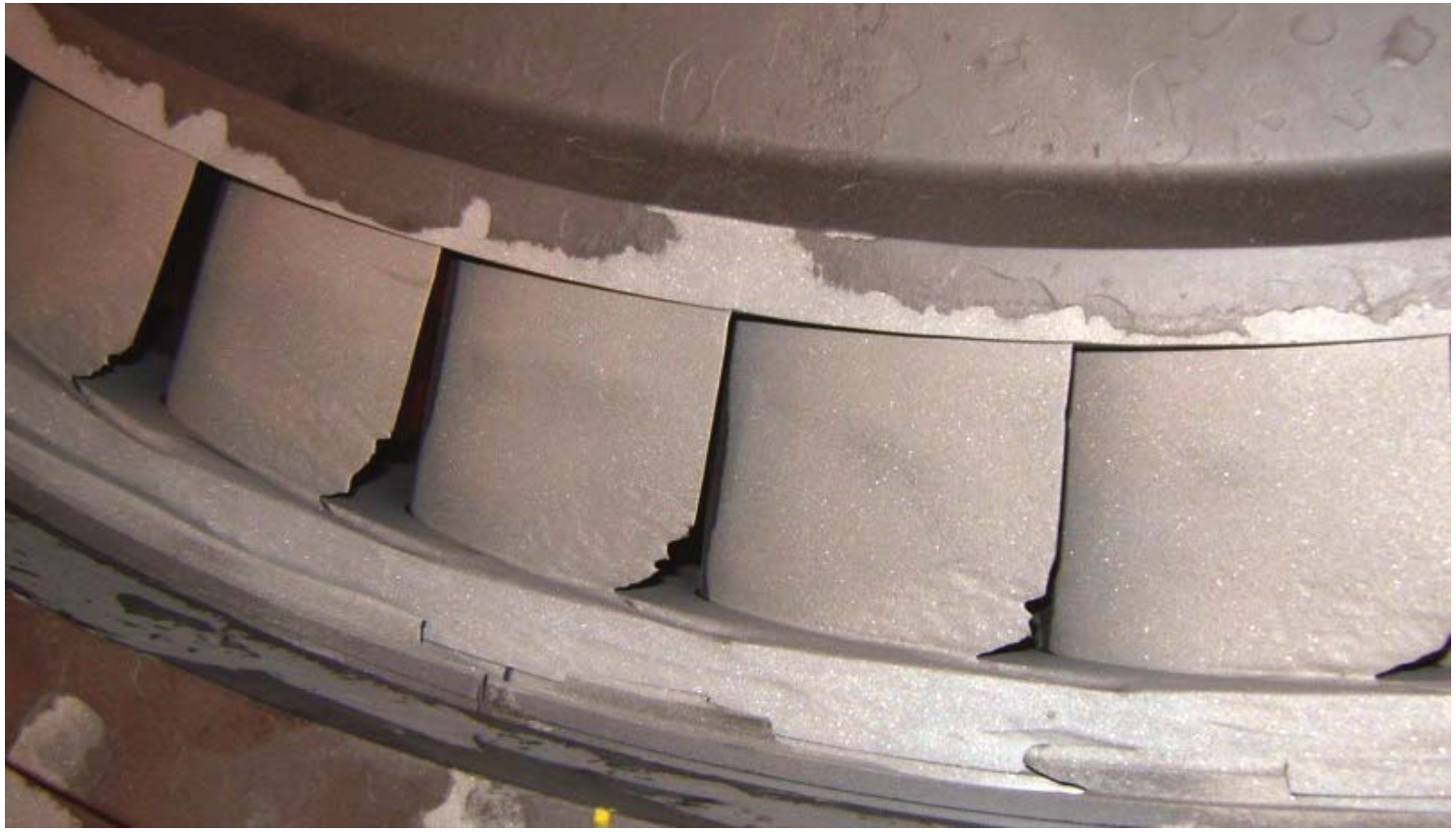

Solid particle erosion (SPE)

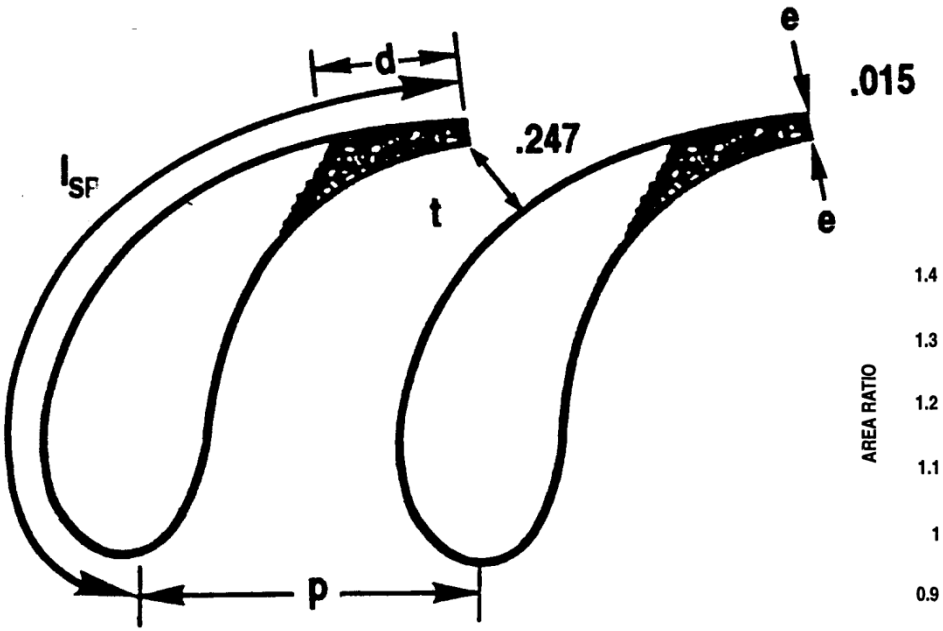

N.B. This is a very design specific problem!!!

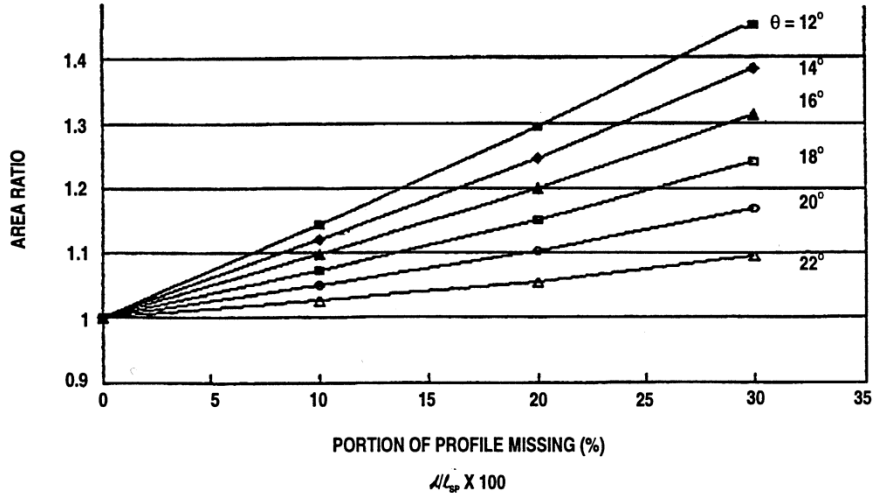

l_{SP} = STEAM PATH LENGTH
t = THROAT THICKNESS
p = PITCH
e = EDGE THICKNESS

Ken Cotton, "Evaluating and Improving Steam Turbine Performance", 2nd ed.

Turbine damage – rubbing