CHALMERS

ELKRAFT 2017

Full-Power Converter Wind Turbine Emulator

Background and Aim

To better understand the dynamic performance of a full-power converter (FPC) wind turbine (WT), e.g. its capability to support grid frequency and voltage stability, it is useful to build a FPC WT emulator in the lab, where different control strategies regarding how the WT should behave during grid disturbances can be tested and verified. Thus, the aim of this project is to construct a lab setup of a 3 kW FPC WT emulator to emulate the behavior of a GE 2.5 MW FPC WT.

Electrical Diagram of a Full-Power Converter Wind Turbine and its Emulator

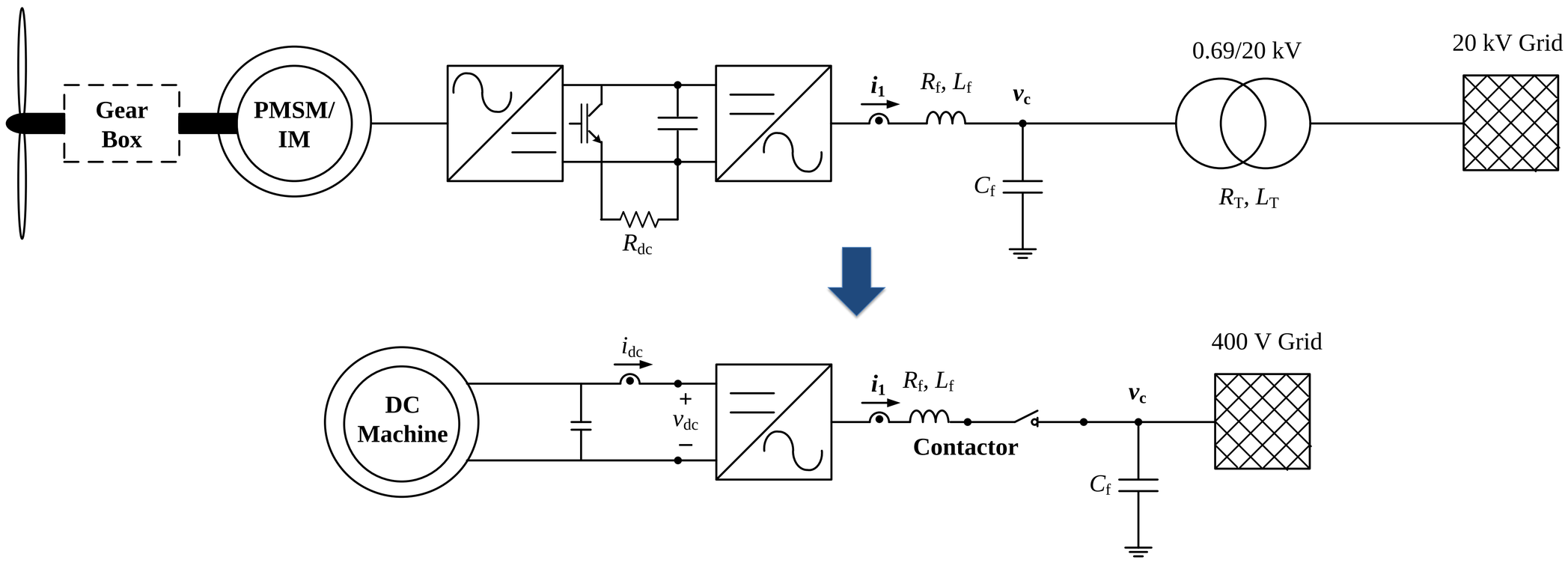

Fig. 1 Full-power converter wind turbine (upper) and its emulator (lower).

Block Diagram and Lab Setup

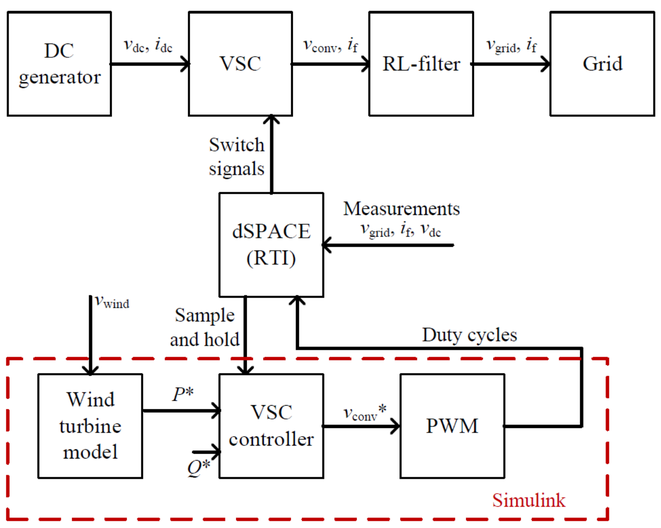

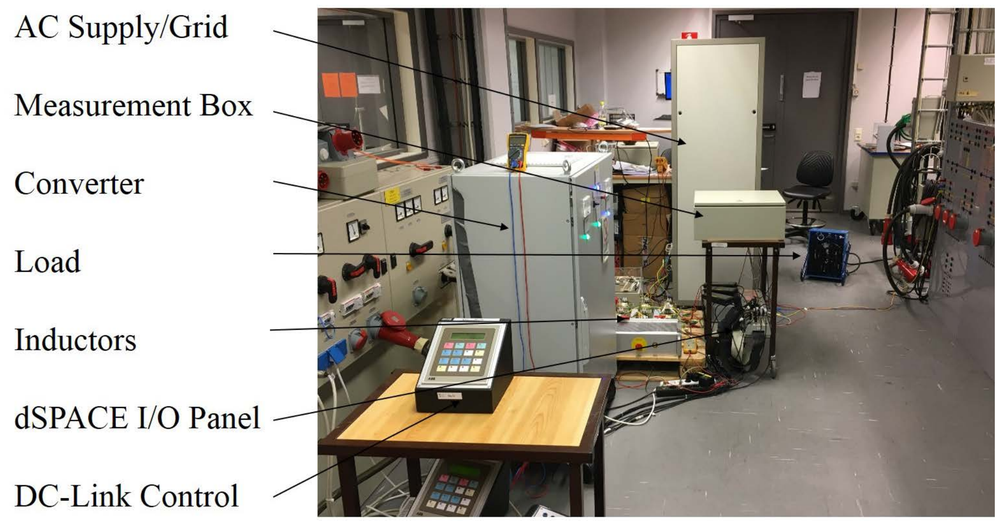

Fig. 2 Block diagram of the 3 kW wind turbine emulator (left) and corresponding lab setup (right).

Measurement Results

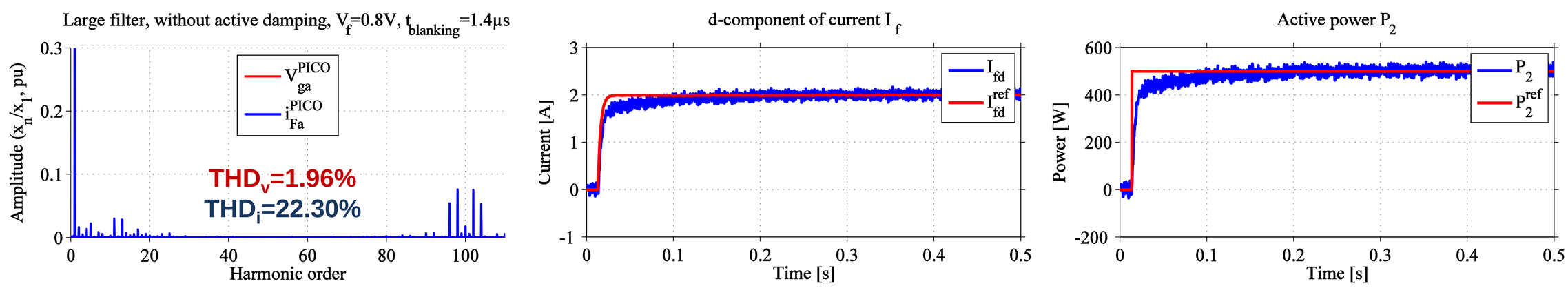

Fig. 3 Harmonics of measured grid voltage and converter current (left), d-axis reference and measured current (mid), active power injected to the grid (right).

Conclusions

- **A 3 kW FPC WT emulator is successfully constructed in the lab by using a voltage source converter supplied with a dc machine with controllers implemented in dSPACE.**
- **Active and reactive power step responses are tested and the results show satisfactory performance.**
- **Further work is to verify the emulator performance against the GE 2.5 MW FPC WT, and to extend the WT emulator to include an ac generator.**

Financed by Chalmers Energy Area of Advance.

Presented at Elkraft2017, Gothenburg, May 2017.

Chalmers University of Technology
Department of Energy and Environment

Victor Johansson, Anton Kersten, Anders Mikiver,
Johan Stelin, Anton Thorslund
Peiyuan Chen, Massimo Bongiorno
Division of Electric Power Engineering
peiyuan@chalmers.se