Energiforsk seminar: Subsynchronous oscillations

Tuomas Rauhala / 2016-11-24, Stockholm

Subsynchronous oscillations – aspects and experiences from Finland

FINGRID

24.11.2016

Content of the presentation

Subsynchronous oscillations in Finnish transmission network

Case 1: Planning studies to address HVDC SSTI for five torsional oscillation modes

Case 2: HVDC SSTI and SSO protection co-ordination

Case 3: Monitoring of total torsional damping using PMUs

Case 4: SSR torque amplification in meshed series compensated network

Subsynchronous oscillations and Finnish transmission network

- the transmission path from Central Finland towards Scandinavia is strongly series compensated
  - degree of compensation 70-75%
  - 11 series compensators
- the large 400 kV network connected units located in South and Southwest coast
  - HVDC SSTI has been more of interest
- wind power is mainly connected on westers shore line but on lower voltage level (110 kV)
- the connection point of Hanhikivi plant to 400 kV network is in vicinity of series compensated part of the grid

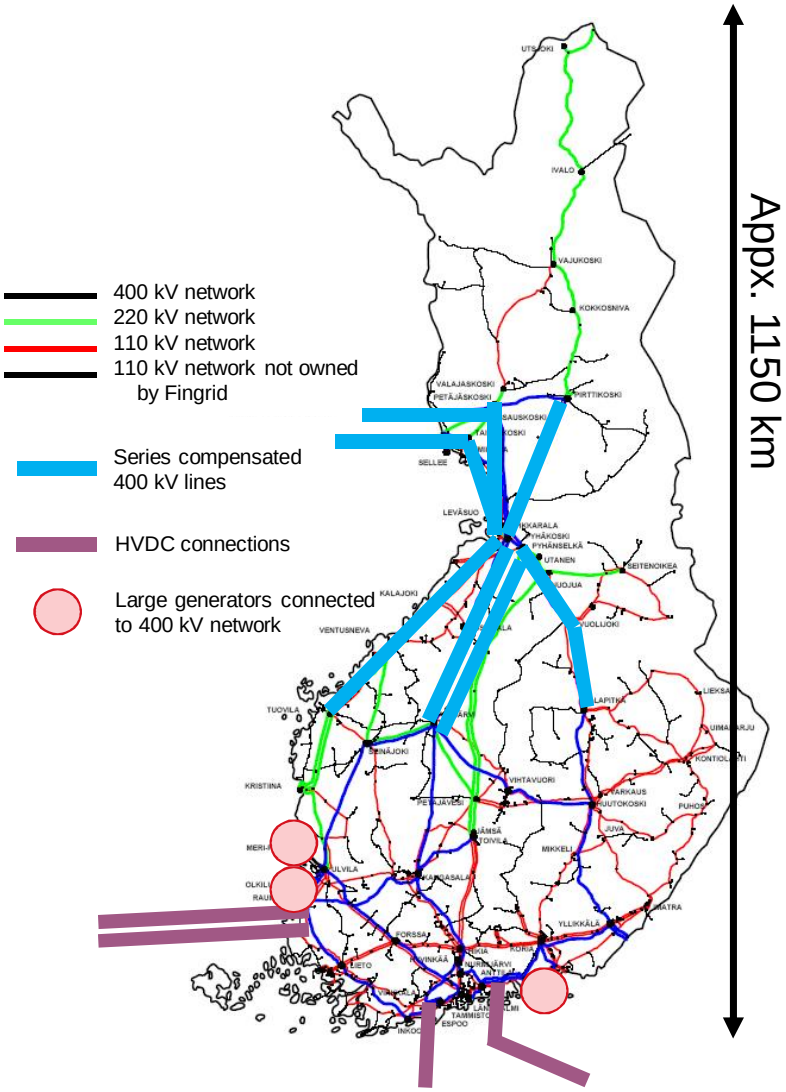

Case 1: Planning studies to address HVDC SSTI for five torsional oscillation modes

References:

Rauhala T.. "Frequency Domain Methods for Transmission Network Planning to Assess Subsynchronous Torsional Interaction due to High Voltage Direct Current Transmission System". Ph.D. Thesis. Tampere University of Technology. ISBN ISSN 1459-2045. Tampere, Finland. November 2014. 166 pages

Rauhala, T., Järventausta, P. 2010. On Feasibility of SSDC to Improve the Effect of HVDC on Subsynchronous Damping on Several Lower Range Torsional Oscillation Modes. Proceedings of IEEE Power & Energy Society General Meeting. Minneapolis, Minnesota, USA. 8 pg. July 2010

Rauhala T., Gole A. M., Järventausta P.. Detection of Subsynchronous Torsional Oscillation Frequencies Using Phasor Measurement. IEEE Transactions in Power Delivery, Vol. 31. no. 1. pp 11-19. January 2016.

Planning SSO on Rauma region

- during period 2005 and 2013 SSO conditions in Rauma region were under constant change
  - commissioning of Fenno-Skan 2
  - C&P upgrade of Fenno-Skan 1
  - uprate of Olkiluoto 1 and 2
  - planned commissioning of Olkiluoto 3
  - network reinforcements for Fenno-Skan 2 and Olkiluoto 3

Torsional frequencies considered in the study [Hz]				
6	9.5	10.5	14.5	19.5

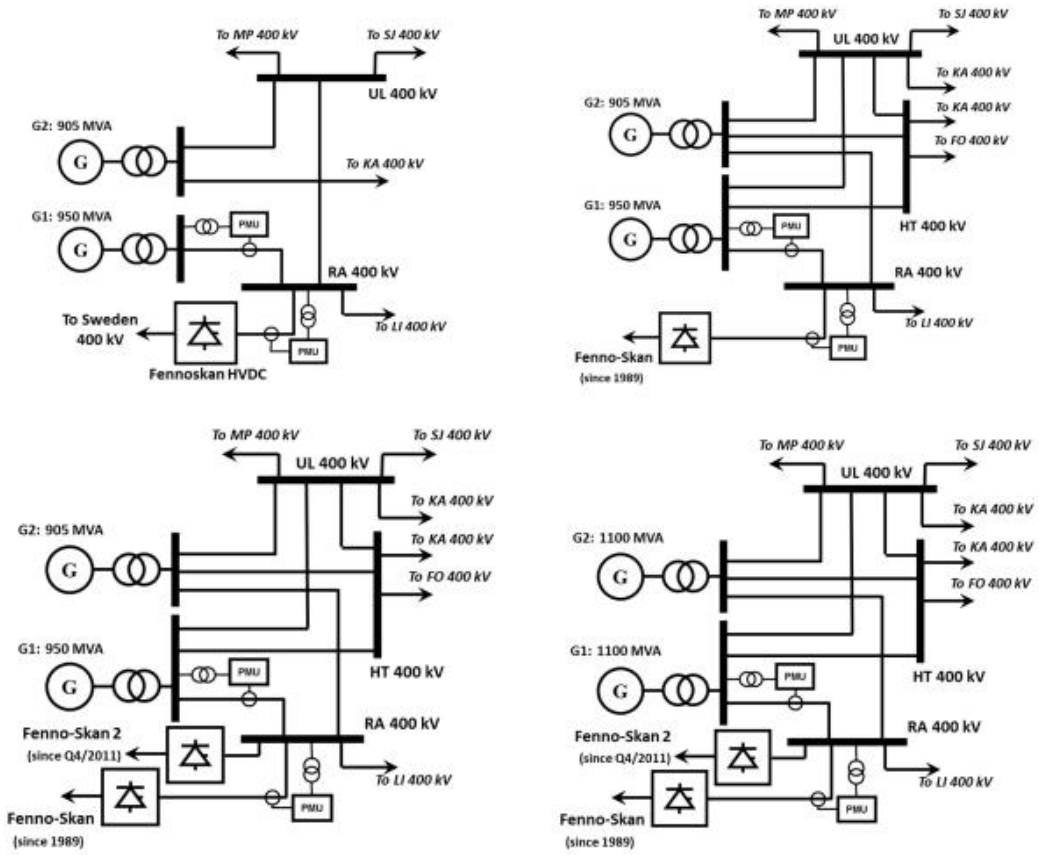

Fig 5.1 Different phases of structural changes in the Southwest part of Finnish 400 kV network

Study approaches and methods to consider HVDC SSTI during network planning

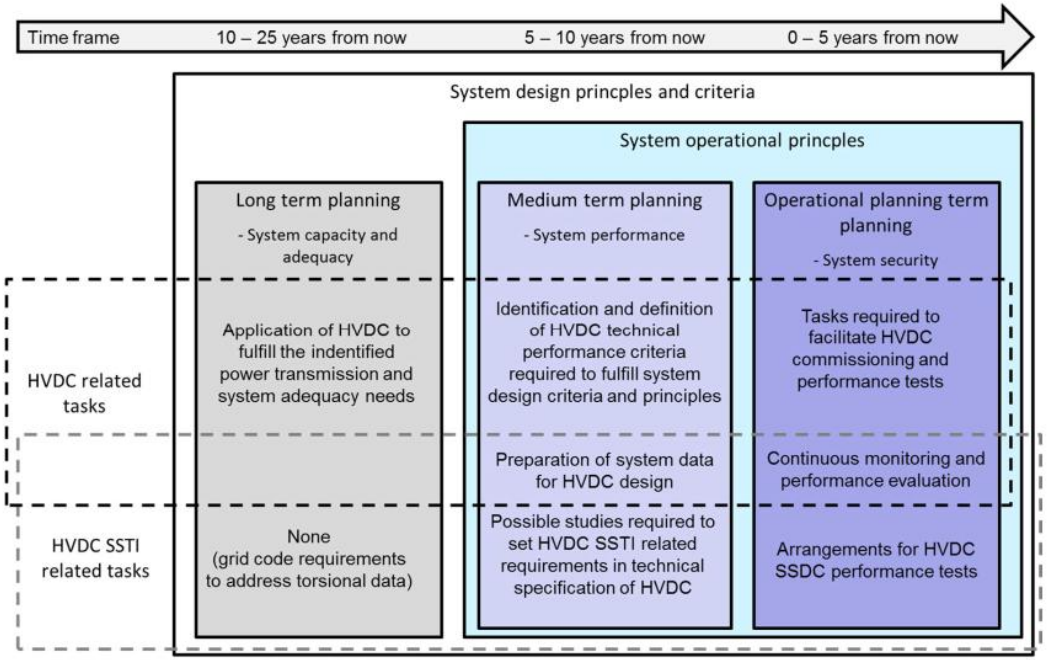

Fig. 2.6 Overview of the transmission network planning process and the role of the HVDC SSTI studies in it

Lessons learned (HVDC SSTI and five 5-20 Hz torsional modes)

Under conditions affected by numerous uncertainties

- guarantee high level of flexibility in damping circuit desing

Get rid of uncertainties affecting the estimated SSTI risk

- guarantee availability of methods to reduce the number of uncertainties affecting the estimated SSTI risk level

Communicate

- find an approach to illustrate the effect of uncertainties
  (and find a way to figure out what's the existing level of subsynchronous torsional damping...)

Case 2: HVDC SSTI and SSO protection co-ordination

References:

Rauhala, T., Kuisti, H., Jyrinsalo, J., Joki-Korpela, S., Järventausta, P. 2009. Managing the Effect of Parallel HVDC Systems on Subsynchronous Damping of Nearby Generator Units, Proceedings of Cigre Study Committee B4 Colloquim. Bergen, Norway. 8 pg. June 2009.

The scope of the SSO protection related study

The three questions to be answered

Effect of parallel AC network on selectivity of SSO protection based on local frequency measurement

Effect of structure of HVDC system on selectivity of SSO protection based on local frequency measurement

Special case of two different torsional modes that are 1 Hz apart and that are modes of two different unit

Effect of HVDC on subsynchronous variation in local frequency measurement (both poles with SSDCs)

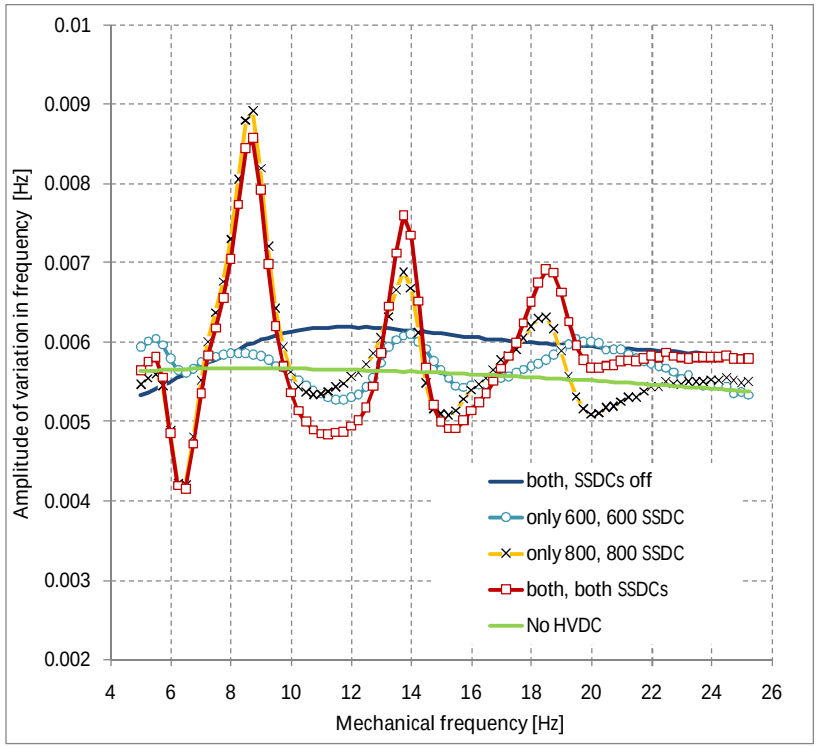

Generator G3

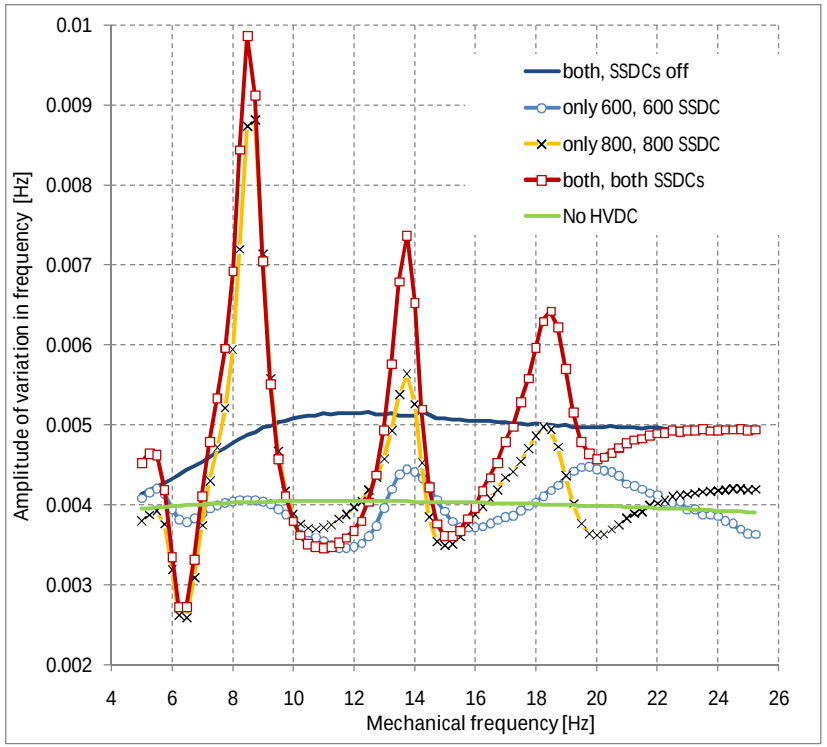

Generators G1/G2

Effect of structure of HVDC on local frequency measurement

		Range of subsynchornous variation in frequency measurement [mHz] due to subsynchronous oscillation of generator speed with amplitude of 8 mHz (peak)				
		G1/G2		G3		
		9.5	19.5	6.0	10.5	14.5
SCC of parallel AC network	SCC2	3.9 - 4.6	3.8 - 4.8	4.8 - 5.8	5.0 - 5.5	5.5 - 5.7
	SCC5	2.2 - 2.8	2.2 - 2.5	3.4 - 3.7	3.5 - 3.8	3.7 - 3.8

- variation in short circuit level results in significant variation in amplitudes of subsynchronous components

  → selectivity of protection based on local frequency measurement cannot be guaranteed
- identical HVDC's and generators would have decreased the variations
  - nevertheless, the effect of SCL dictates the level of variation
  - the study also ignored the differences in torsional characteristics

The main reasons for rejecting HVDC tripping SSO protection

Relatively large range of operating conditions under which HVDC may have adverse effect on torsional damping

No reasonable selectivity could have been obtained without complex telecom arrangements and control/logic systems

SSO protection should have been implemented for both poles

Risk of losing both poles as well risk of significant momentary increase in amplitude of SSO

Unit tripping SSO protection scheme was recommended as the last line of protection

Case 3: Monitoring of total torsional damping using PMUs

References:

Rauhala T.. "Frequency Domain Methods for Transmission Network Planning to Assess Subsynchronous Torsional Interaction due to High Voltage Direct Current Transmission System". Ph.D. Thesis. Tampere University of Technology. ISBN ISSN 1459-2045. Tampere, Finland. November 2014. 166 pages

Rauhala, T., Saarinen, K., Kaukonen, T. On Applications and Quality of Subsynchronous Frequency Components Extracted from Phasor Measurement Unit Measurement Data, Paper C2-102, Cigre Session 2008. Paris, France. 8 pg. August 2008.

Rauhala T., Gole A. M., Järventausta P.. Detection of Subsynchronous Torsional Oscillation Frequencies Using Phasor Measurement. IEEE Transactions in Power Delivery, Vol. 31. no. 1. pp 11-19. January 2016.

SSO detection using PMUs

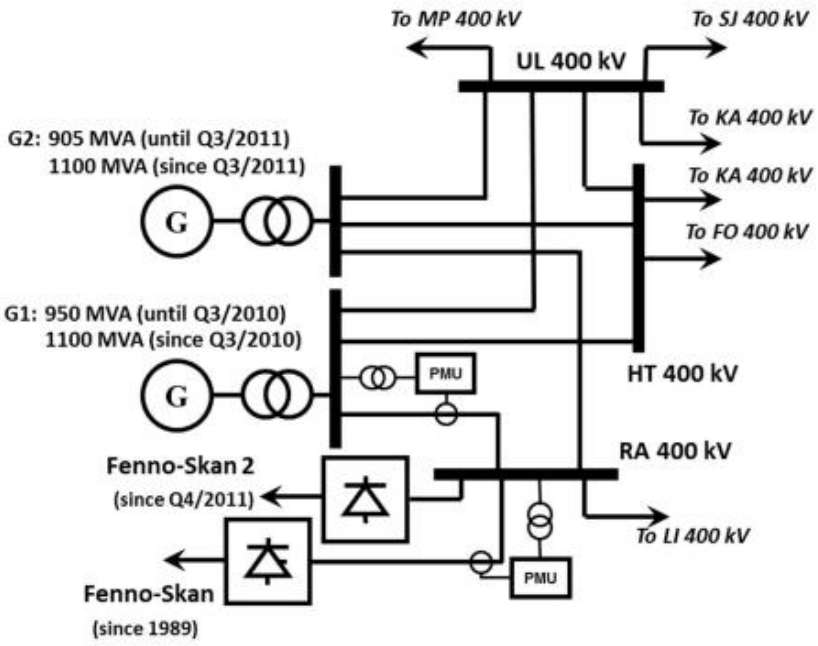

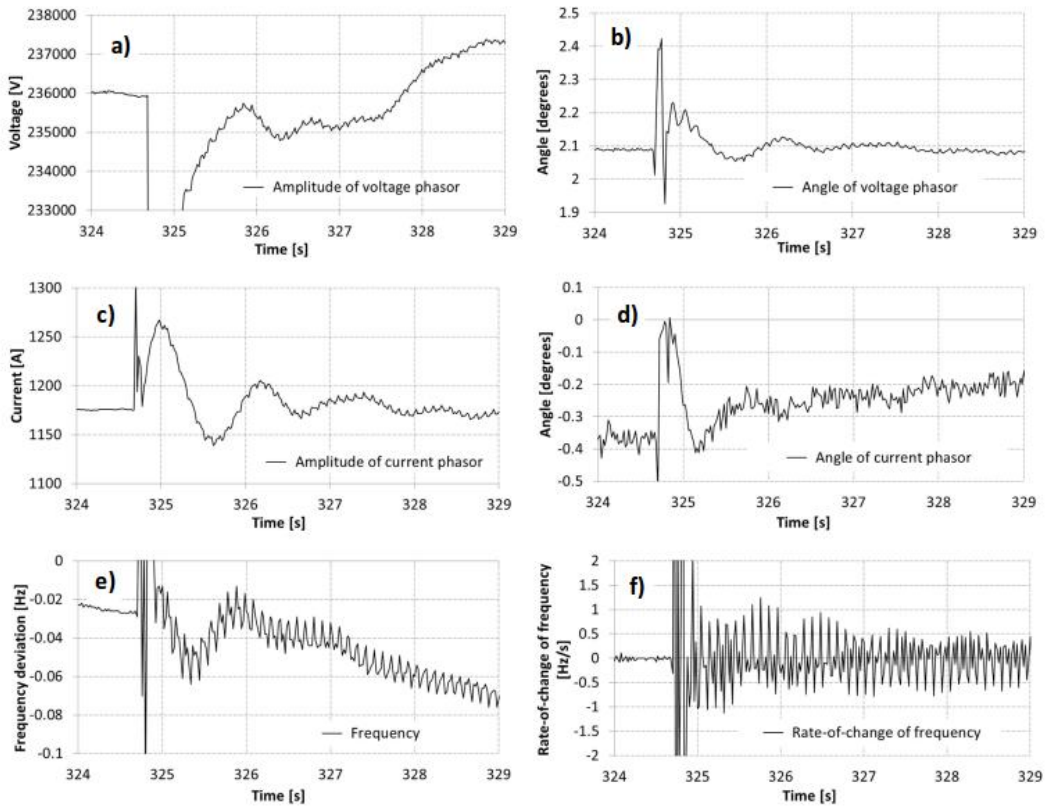

Fig. 4.13 Example of a post-disturbance recording of the recorded phasor quantities from field measurements; a) voltage amplitude, b) voltage angle, c) current amplitude, d) current angle, e) frequency, f) rate-of-change of frequency

Effect of Olkiluoto 1 and 2 uprates on SSO

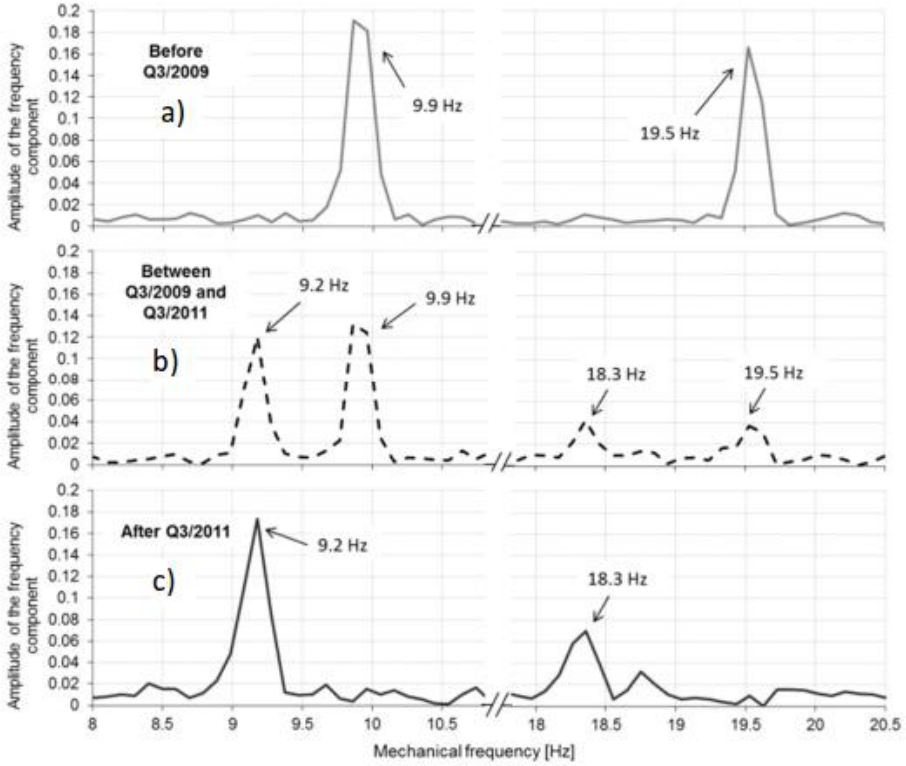

Figure 5.4 Examples of subsynchronous components in the post-disturbance PMU frequency at different stages of the refurbishment projects (see Table 5.2)

Measured high amplitude SSO and estimated damping (two year period from summer 2006)

No.	Nature of disturbance	Peak value of frequency deviation [Hz]		Estimated damping based on band-pass filtering (given as log dec)		Estimated damping based on spectral analysis (given as log dec)		No.	Nature of disturbance	Peak value of frequency deviation [Hz]		Estimated damping based on band-pass filtering (given as log dec)		Estimated damping based on spectral analysis (given as log dec)	
		9.9 Hz	**19.5 Hz**	**9.9 Hz**	**19.5 Hz**	**9.9 Hz**	**19.5 Hz**			**9.9 Hz**	**19.5 Hz**	**9.9 Hz**	**19.5 Hz**	**9.9 Hz**	**19.5 Hz**
1	Fault close to Swedish side converter station	3	2	0.0183	0.0065	0.0178	0.0056	10	Sudden disconnection of HVDC	4	3	0.0190	0.0060	0.0178	0.0058
2	Sudden disconnection of 1060 MVA unit close to the Swedish side converter station	6	3	0.0198	0.0059	0.0178	0.0051	11	Sudden change in power transmitted by HVDC	3.5	0	0.0183	N.A.	0.0190	N.A.
3	Fault close to Swedish side converter station	5	3	0.0193	0.0065	0.0203	0.0058	12	Three phase fault in 110 kV subtransmission network	6	3	0.0210	0.0069	0.0197	0.0064
4	Fault close to Swedish side converter station	5	4	0.0193	0.0068	0.0171	0.0061	13	Sudden change in power transmitted by HVDC	4	2	0.0185	N.A.	0.0168	N.A.
5	Fault on 400 kV transmission line close to G2	7	5	0.0193	0.0068	0.0203	0.0058	14	Sudden disconnection of HVDC	6	3	0.0190	0.0067	0.0178	0.0071
6	Sudden change in power transmitted by HVDC	5	4	0.0168	0.0064	0.0159	0.0067	15	Sudden change in power transmitted by HVDC	3	3	0.0180	0.0067	0.0190	0.0067
7	Sudden disconnection of HVDC	5	5	0.0200	0.0064	0.0197	0.0064	16	Sudden disconnection of HVDC	8	4	0.0160	0.0072	0.0165	0.0061
8	Sudden change in power transmitted by HVDC	3	2	0.0178	N.A.	0.0184	N.A.	17	Fault and unsuccessful reclosing on 400 kV line in vicinity of Swedish side converter station	1	6	N.A.	0.0077	N.A.	0.0074
9	Sudden change in power transmitted by HVDC	4	3	0.0183	0.0062	0.0178	0.0064								

RID

Case 4: SSR torque amplification in meshed series compensated network

References:

Vuorenpää, P., Rauhala, T., Järventausta, P., Acha, E. 2013. On Assessing the Risk of SSR Related Torque Amplification in Series Compensated Networks. Proceedings of the 10th International Conference on Power Systems Transients IPST-2013. Vancouver, B.C., Canada. 6 pg. July 2013.

Series compensation projects

1997:

Finland-Sweden intersection with 70%

2001:

North-South intersection with 50 %

2007:

Upgrade of North-South up to 75%

2009:

Lines connecting two main hydro rivers with 70%

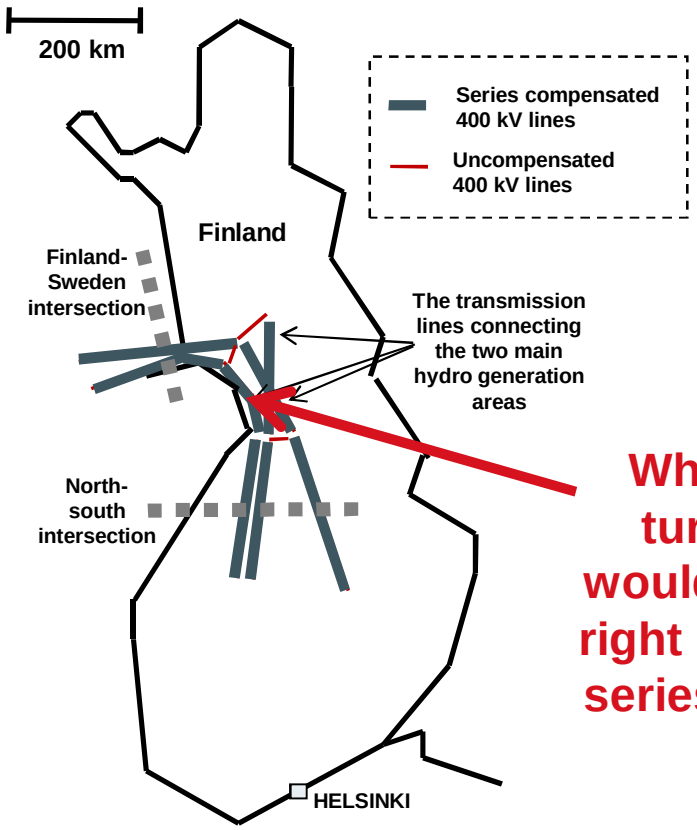

What if a large turbogenerator would be connected right in the middle of series compensated network?

Scope of subsynchronous oscillations related method development work – starting point

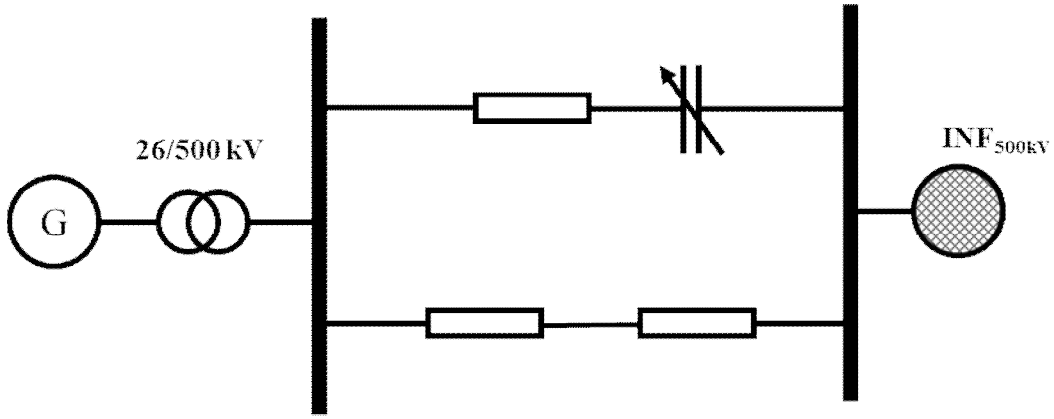

- 2nd IEEE Benchmark - System-1
  - provided mainly for SSR TI method validation

    ... but does not make much sense concerning the nature of the SSR TA in meshed series compensated network

    ... and does not really address plannign perspective

FINGRID

Scope of SSO study/development work – need of transmission network planning and development

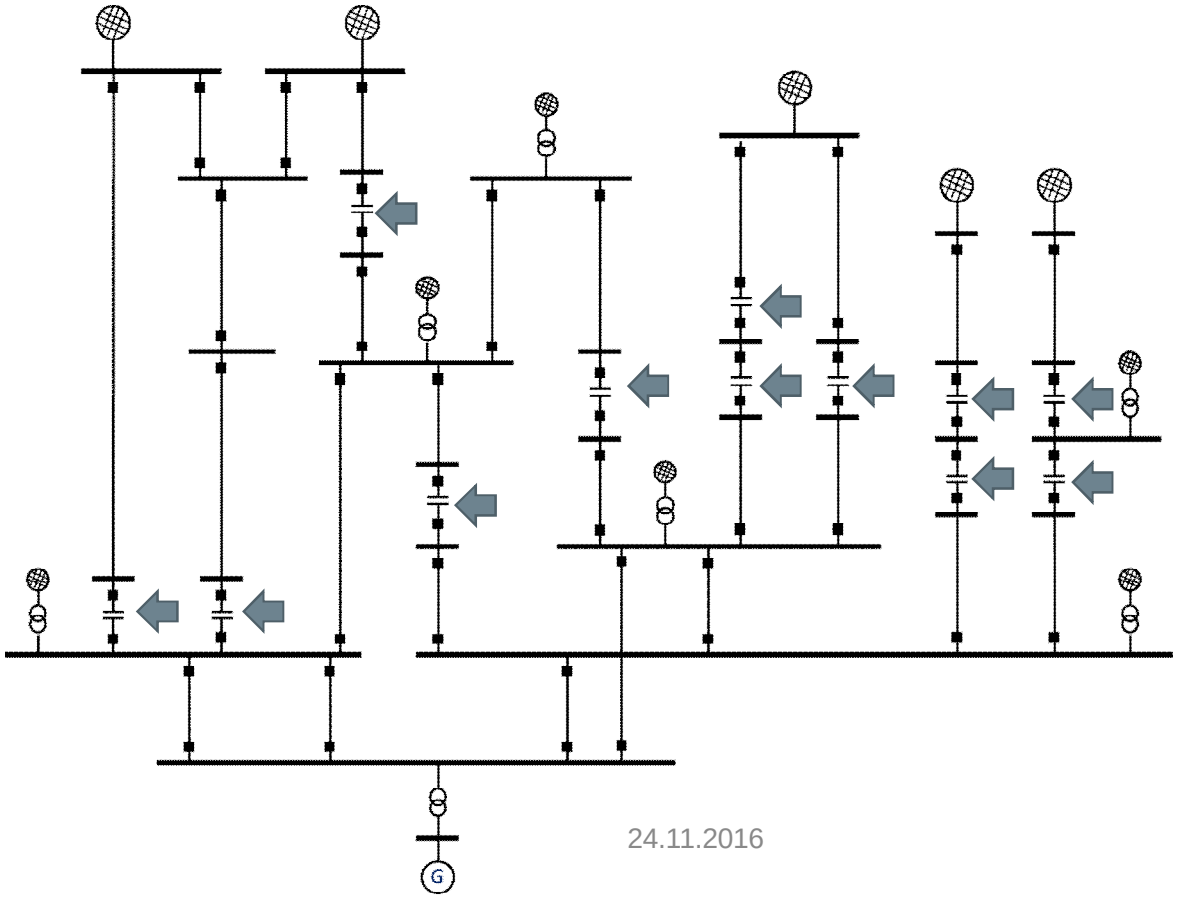

So how to deal with SSR TA method development for system planning purposes

- well if You need to analyze system with
  - tens of lines
  - tens of fault locations on each line
  - 10+ series caps
  - N-0
  - N-1
  - N-2 scenarios (and maybe beyond)
  - large amount of background network SCC scenarios

... You better make one model for method development.

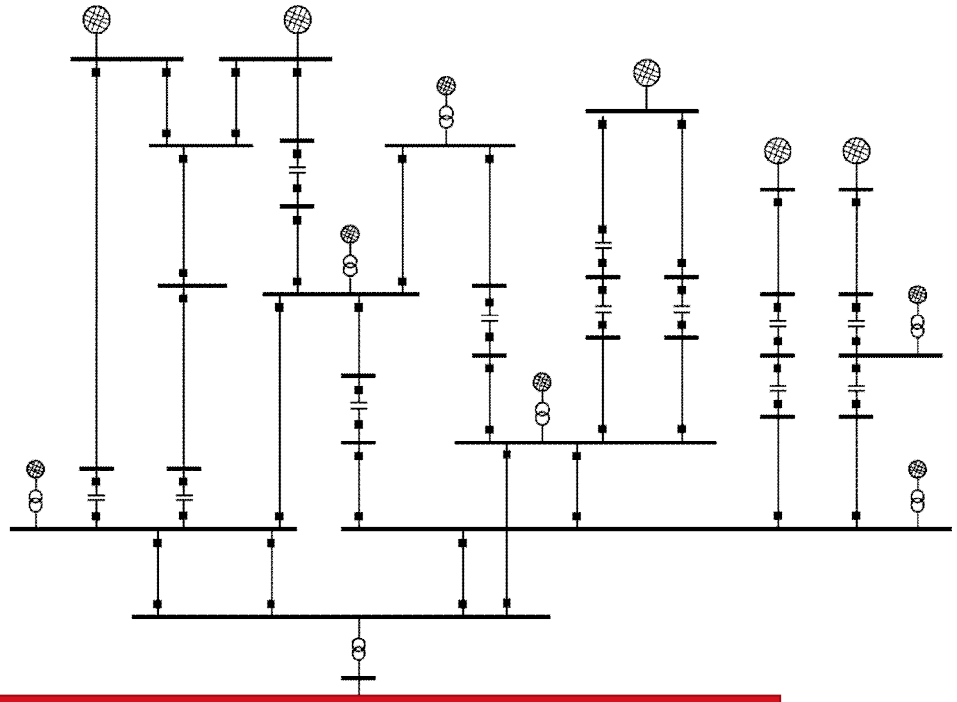

TARGET:
To develope a method capable for screening 10000+ cases using frequency scanning to select some hundreds of study cases for EMT

FINGRID

What has been done to demonstrate the case: First step: a comprehensive SSR TI study

- SSR TI study was carried out for the meshed series compensated model presuming unit with highest torsional frequency of 15 Hs
- then the SSR TA was analyzed using the traditional approach and using EMT
- the results were analyzed to
  - a) evaluate the feasibility of traditional frequency scanning approach
  - b) evaluate what improved frequency scanning method should take into account
- two representative cases out of 5000+ cases were chosed for this paper to illustrate the findings

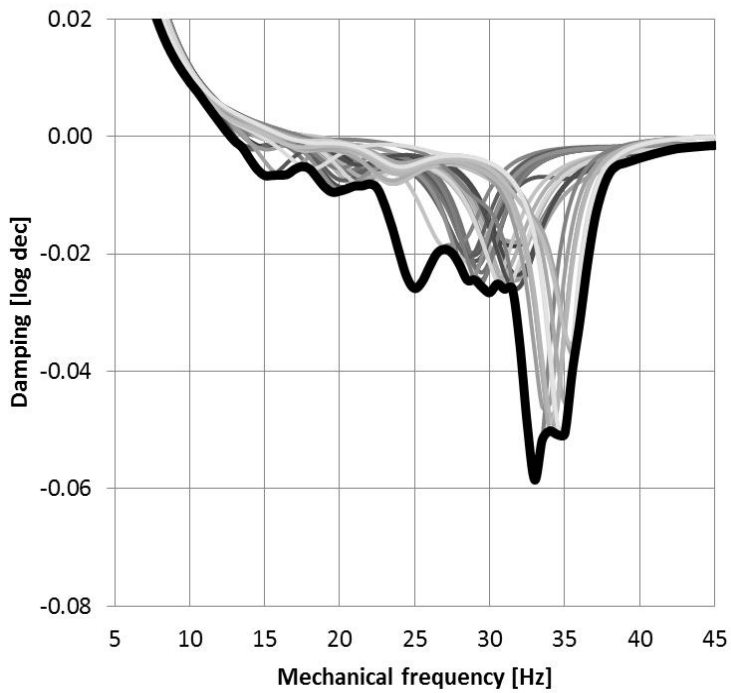

Example of SSR TI study result
(not relevant with regard the paper)

FINGRID

For those two cases, what does the traditional approach indicate?

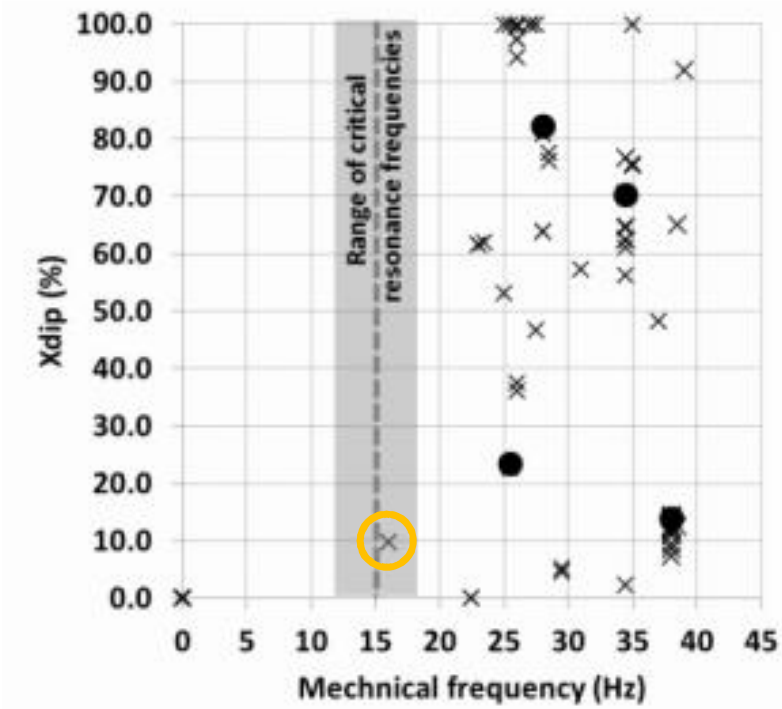

Case 1: Not interesting, only one small dip within the range of interest

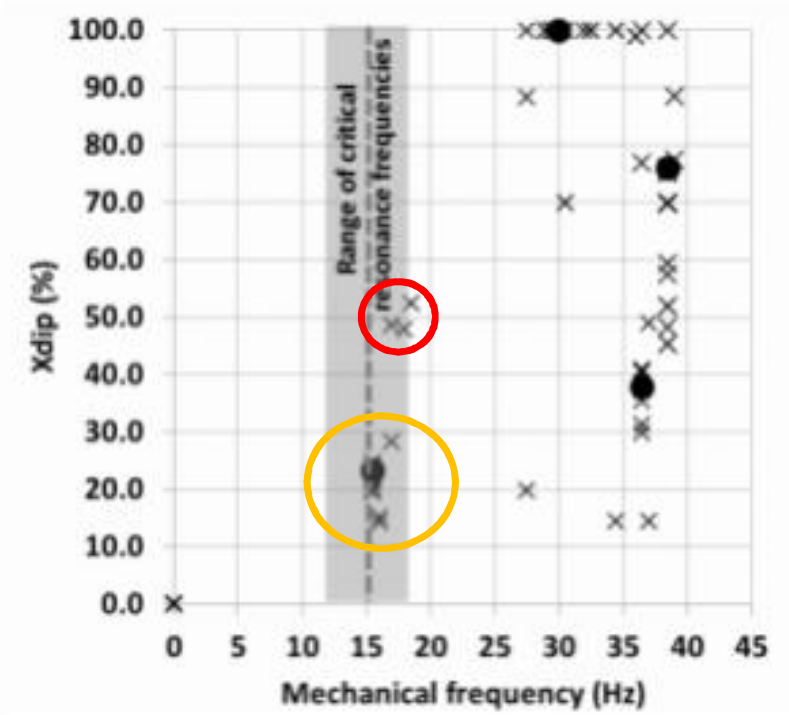

Case 2: Interesting, several moderate dips (15-25%) and large dips (~50%)

For those two cases, what does EMT study indicate?

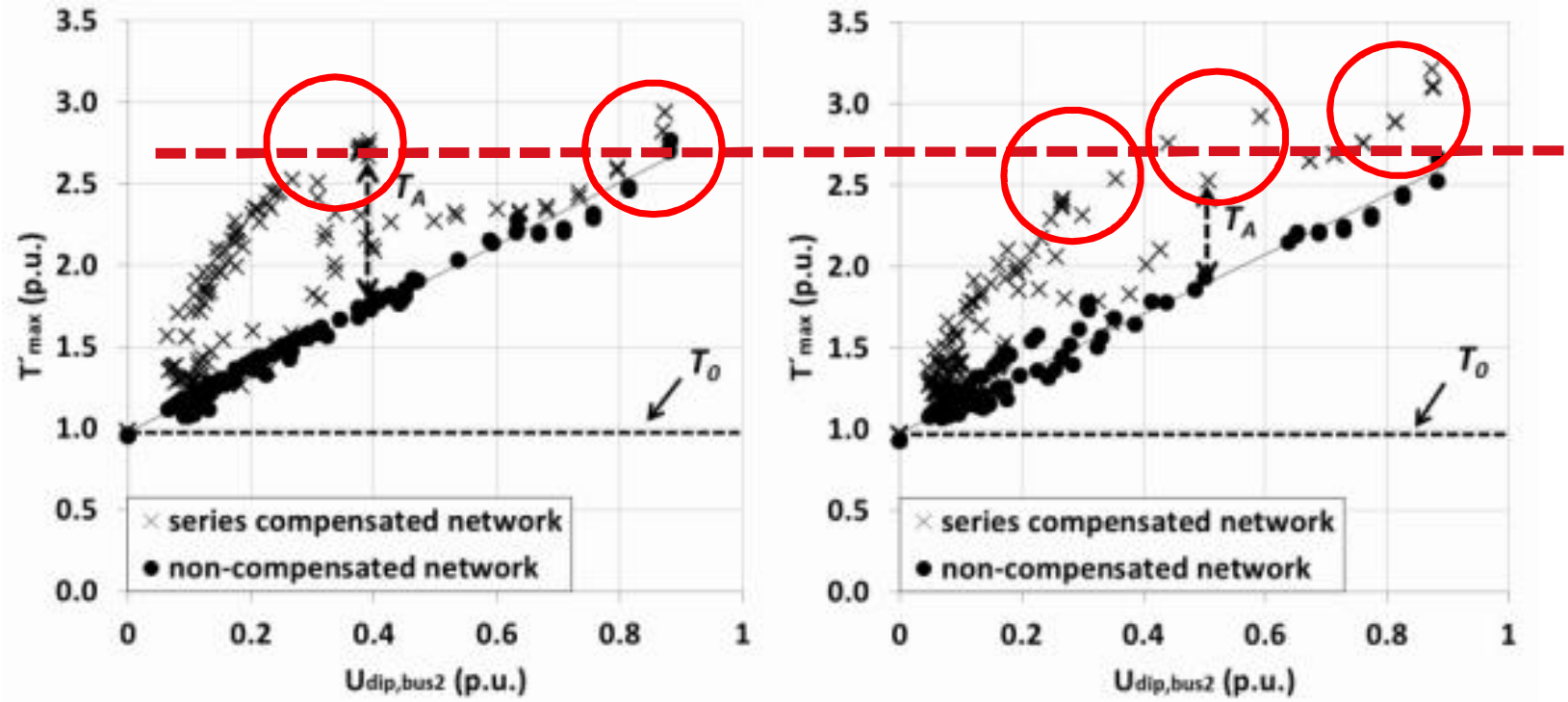

Case 1: Interesting, large number of distant faults equal to close-by faults

Case 2: Very interesting, several faults exceed the level of close-by faults

So why Case 1 becomes interesting?

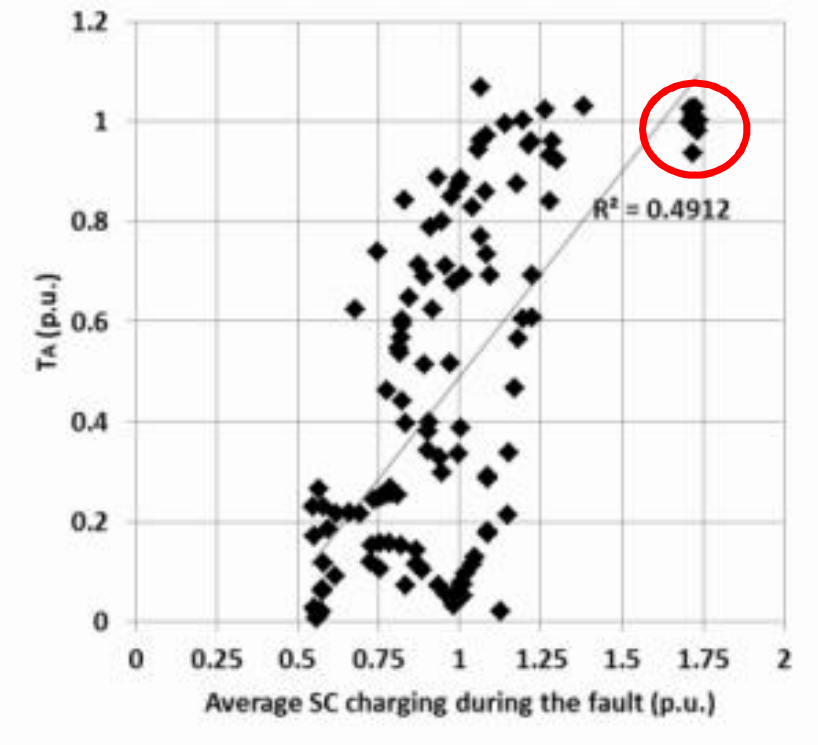

Charging and discharging of capacitor located moderate distance away from the genetor, amplify the impulse initiating and amplifying the oscillations

FINGRID

Fingrid Oyj
Läkkisepäntie 21
00620 Helsinki
PL 530, 00101 Helsinki
Puh. 030 395 5000
Fax. 030 395 5196

FINGRID